XB COMPONENTS

Fuses and fuse holders

3

XB COMPONENTS

- **F** For fuses Material
- **M** For cable number
- mm² of track connection
- **V** for first team
- **C** Economic
- OEM Cover included fuse
- € included includes
- terminals
- F
- T
- * on demand

! The fuse holders do not include the fuse except those indicated with the symbol F

Lloyd's Register

Certificado de Aprobación

Certificamos que el Sistema de Gestión de :

X.B. Components, S.A.

ISO 9001:2015

Advanced Automotive Solutions

Biffi&Premoli

AUTO

Micro 5

Mini 6-7

Uni 8

Maxi and Maxi Compact 9-10

Midi 10

Mega and Mega Compact 11

Power 11

Strip 12-13

Cube 14

Jaso 15-20

Continental 21-22

6,3x30 23

AUTO

Audio car 10x38 23

Uni and Mini circuit breakers 24-26

Ezfus 27-28

Relays 28

Circuit breakers 29-33

Fuse holder 34-56

Relay holder 57

Modules 58-69

Caps 70-74

Supports 75-76

Extractor forceps 77-78

5x20 79-80

Electronic Industry

6,3x32 81-82

Ezfus 83-90

SUBfus 91-94

Fuse holder 95-101

Fuse clips 102

Audio gold

Gold series fuses 103-104

Gold series fuse holder 105-110

Cases and special packaging

Cases 111-114

49

OEM

32 V

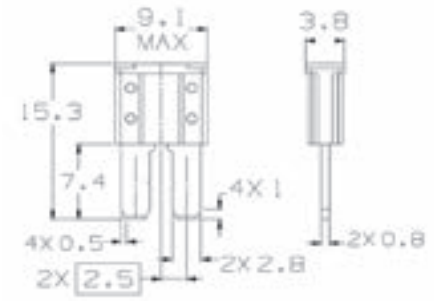

50/500

Art.	A
03.49.05-LF	5
03.49.075-LF	7.5
03.49.10-LF	10
03.49.15-LF	15
03.49.20-LF	20
03.49.25-LF	25
03.49.30-LF	30

32 V

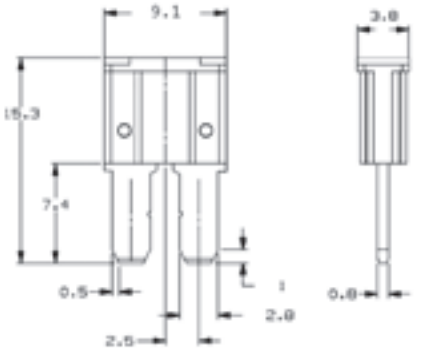

50/500

Art.	A
03.49.05-0	5
03.49.075-0	7.5
03.49.10-0	10
03.49.15-0	15
03.49.20-0	20
03.49.25-0	25
03.49.30-0	30

Micro3

493

OEM

32 V

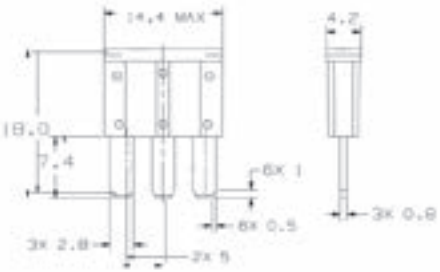

50/500

Art.	A
03.493.05-LF	5
03.493.075-LF	7.5
03.493.10-LF	10
03.493.15-LF	15

32 V

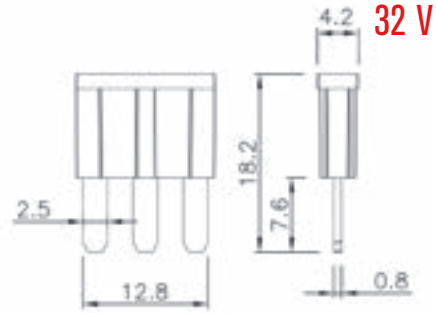

50/500

Art.	A
03.493.05-0	5
03.493.075-0	7.5
03.493.10-0	10
03.493.15-0	15

45

32 V

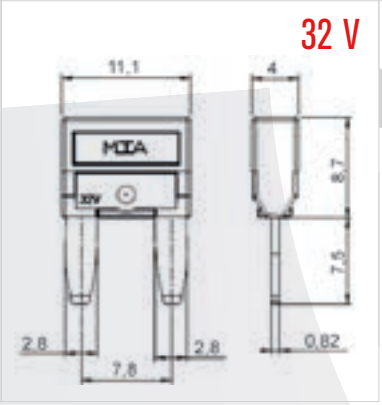

50/500

Art.	A	Art.	A
03.45.02-MTA	2	03.45.10-MTA	10
03.45.03-MTA	3	03.45.15-MTA	15
03.45.04-MTA	4	03.45.20-MTA	20
03.45.05-MTA	5	03.45.25-MTA	25
03.45.075-MTA	7.5	03.45.30-MTA	30

32 V

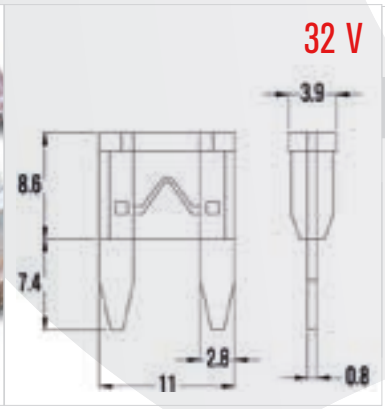

50/500

Art.	A	Art.	A
03.45.02-0	2	03.45.10-0	10
03.45.03-0	3	03.45.15-0	15
03.45.04-0	4	03.45.20-0	20
03.45.05-0	5	03.45.25-0	25
03.45.075-0	7.5	03.45.30-0	30

80 V

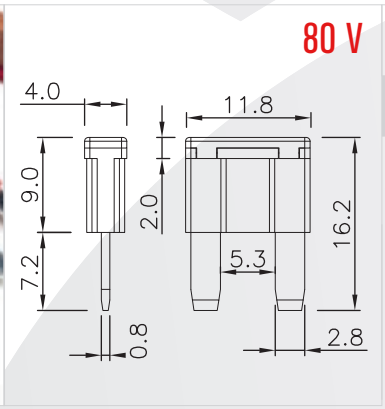

50/500

Art.	A	Art.	A
03.45.01-80V	1	03.45.10-80V	10
03.45.02-80V	2	03.45.15-80V	15
03.45.03-80V	3	03.45.20-80V	20
03.45.04-80V	4	03.45.25-80V	25
03.45.05-80V	5	03.45.30-80V	30
03.45.075-80V	7.5		

45L

32 V

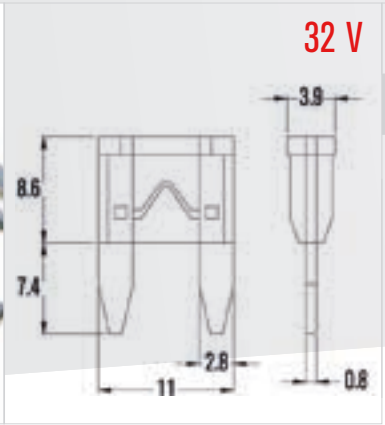

25/250

Art.	A	Art.	A
03.45L.02-0	2	03.45L.15-0	15
03.45L.03-0	3	03.45L.20-0	20
03.45L.04-0	4	03.45L.25-0	25
03.45L.05-0	5	03.45L.30-0	30
03.45L.075-0	7.5	03.45L.35-0	35
03.45L.10-0	10		

47

OEM

58 V

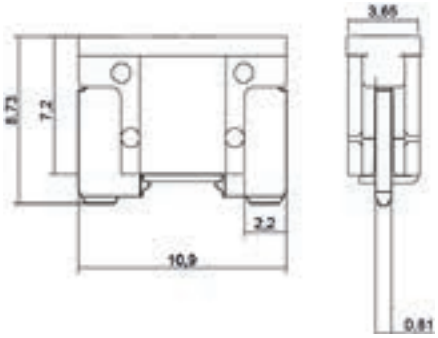

50/500

Art.	A
03.47.02-MTA	2
03.47.03-MTA	3
03.47.04-MTA	4
03.47.05-MTA	5
03.47.075-MTA	7.5
03.47.10-MTA	10
03.47.15-MTA	15
03.47.20-MTA	20
03.47.25-MTA	25
03.47.30-MTA	30

58 V

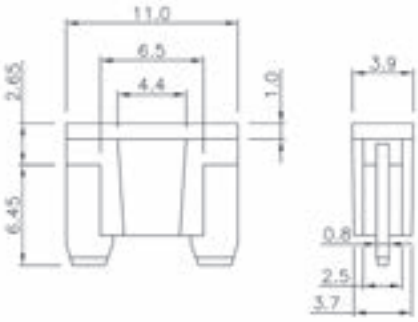

50/500

Art.	A
03.47.02-0	2
03.47.03-0	3
03.47.04-0	4
03.47.05-0	5
03.47.075-0	7.5
03.47.10-0	10
03.47.15-0	15
03.47.20-0	20
03.47.25-0	25
03.47.30-0	30

47L

LED

58 V

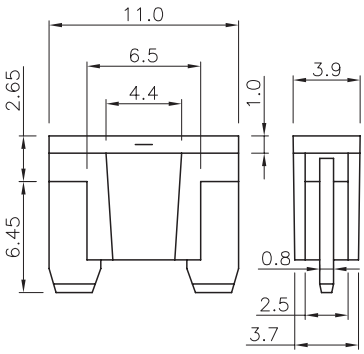

25/250

Art.	A
03.47L.02-0	2
03.47L.03-0	3
03.47L.04-0	4
03.47L.05-0	5
03.47L.075-0	7.5
03.47L.10-0	10
03.47L.15-0	15
03.47L.20-0	20
03.47L.25-0	25
03.47L.30-0	30

AUTO

40

32 V

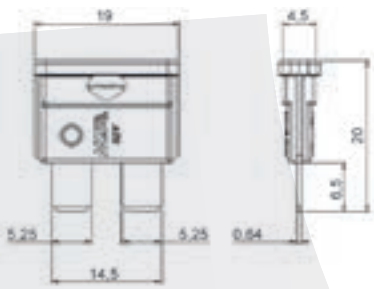

100/1000

Art.	A	Art.	A
03.40.01-MTA	2	03.40.10-MTA	10
03.40.02-MTA	2	03.40.15-MTA	15
03.40.03-MTA	3	03.40.20-MTA	20
03.40.04-MTA	4	03.40.25-MTA	25
03.40.05-MTA	5	03.40.30-MTA	30
03.40.075-MTA	7.5	03.40.40-MTA	40

32 V

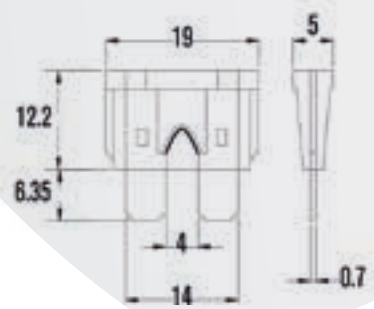

100/1000

Art.	A	Art.	A
03.40.01-0	2	03.40.15-0	15
03.40.02-0	2	03.40.20-0	20
03.40.03-0	3	03.40.25-0	25
03.40.04-0	4	03.40.30-0	30
03.40.05-0	5	03.40.35-0	35
03.40.075-0	7.5	03.40.40-0	40
03.40.10-0	10		

80 V

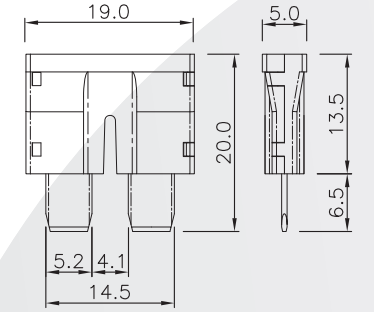

100/1000

Art.	A	Art.	A
03.40.04-80V	4	03.40.20-80V	20
03.40.05-80V	5	03.40.25-80V	25
03.40.10-80V	10	03.40.30-80V	30
03.40.15-80V	15	03.40.40-80V	40

40L

32 V

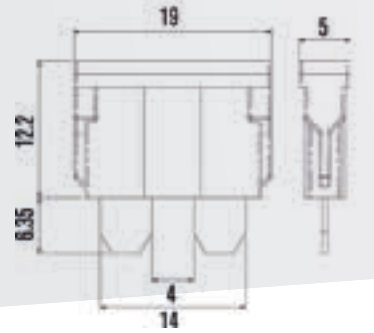

25/250

Art.	A	Art.	A
03.40L.02-0	2	03.40L.15-0	15
03.40L.03-0	3	03.40L.20-0	20
03.40L.04-0	4	03.40L.25-0	25
03.40L.05-0	5	03.40L.30-0	30
03.40L.075-0	7.5	03.40L.40-0	40
03.40L.10-0	10		

50

OEM

32 V

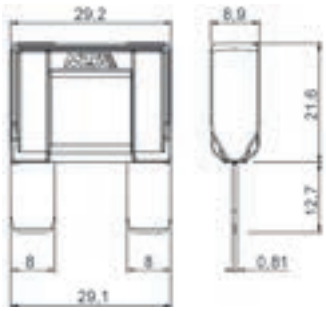

10/100

Art.	A
03.50.20-MTA	20
03.50.30-MTA	30
03.50.40-MTA	40
03.50.50-MTA	50
03.50.60-MTA	60
03.50.70-MTA	70
03.50.80-MTA	80
03.50.100-MTA	100

32 V

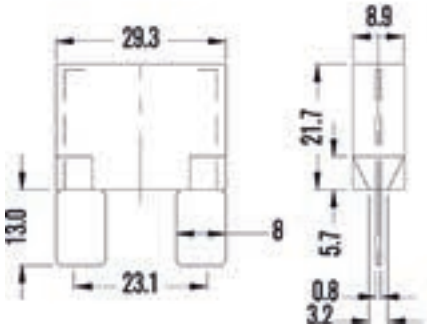

10/100

Art.	A
03.50.20-0	20
03.50.30-0	30
03.50.40-0	40
03.50.50-0	50
03.50.60-0	60
03.50.70-0	70
03.50.80-0	80
03.50.100-0	100

50L

LED

32 V

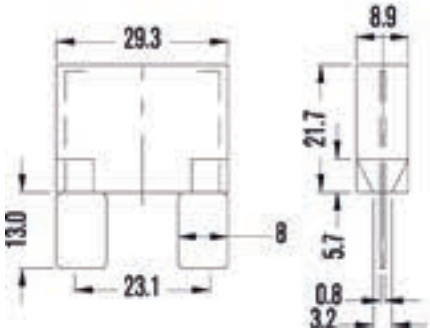

5/50

Art.	A
03.50L.20-0	20
03.50L.25-0	25
03.50L.30-0	30
03.50L.35-0	35
03.50L.40-0	40
03.50L.50-0	50
03.50L.60-0	60
03.50L.70-0	70
03.50L.80-0	80
03.50L.100-0	100
03.50L.120-0	120

AUTO

MaxiCompact

50C

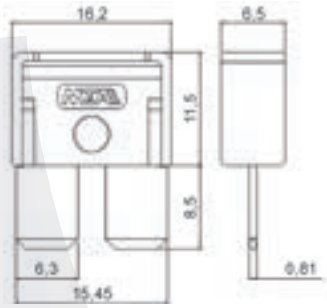

32 V

10/100

Art.	A
03.50C.25-0	25
03.50C.30-0	30
03.50C.35-0	35
03.50C.40-0	40
03.50C.50-0	50
03.50C.60-0	60

MaxiCompact M8

50C8

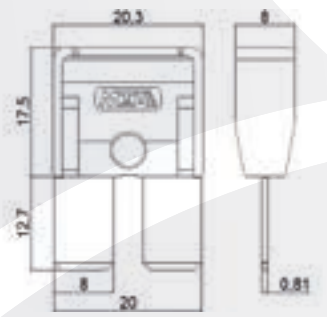

32 V

10/100

Art.	A
03.50C8.30-0	30
03.50C8.35-0	35
03.50C8.40-0	40
03.50C8.50-0	50
03.50C8.60-0	60
03.50C8.70-0	70
03.50C8.80-0	80

Midi

55

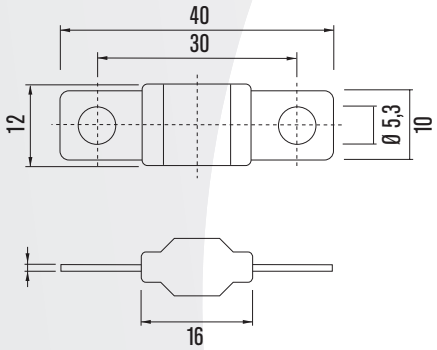

32 V

5/50

Art.	A
03.55.30-0	30
03.55.40-0	40
03.55.50-0	50
03.55.60-0	60
03.55.70-0	70
03.55.80-0	80
03.55.100-0	100
03.55.125-0	125
03.55.150-0*	150
03.55.175-0*	175
03.55.200-0*	200

Mega

60

32 V

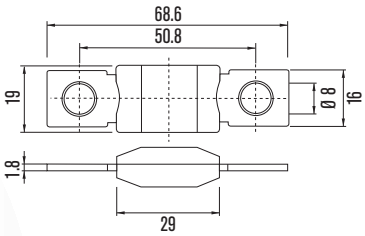

5/50

Art.	A	Art.	A
03.60.80-0*	80	03.60.250-0	250
03.60.100-0	100	03.60.300-0	300
03.60.125-0	125	03.60.350-0*	350
03.60.150-0	150	03.60.400-0	400
03.60.175-0	175	03.60.450-0*	450
03.60.200-0	200	03.60.500-0	500
03.60.225-0	225		

MegaCompact

60C

32 V

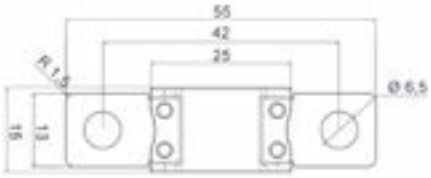

5/50

Art.	A
03.60C.80-0	80
03.60C.100-0	100
03.60C.125-0	125
03.60C.150-0	150
03.60C.175-0	175
03.60C.200-0	200
03.60C.225-0	225
03.60C.250-0	250

Power

61

32 V

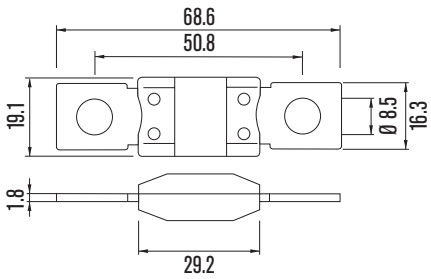

5/50

Art.
03.CAL.1-0
03.CAL.2-0
03.CAL.3-0
03.CAL.4-0
03.CAL.5-0

StripsMini

548

32 V

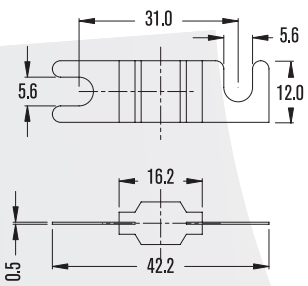

5/50

Art.	A	Art.	A
03.548.30-0	30	03.548.80-0	80
03.548.40-0	40	03.548.100-0	100
03.548.50-0	50	03.548.125-0	125
03.548.60-0	60	03.548.150-0	150
03.548.70-0	70	03.548.200-0	200

StripsUni

547

48 V

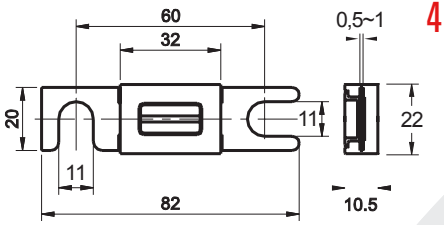

5/50

Art.	A	Art.	A	Art.	A
03.547.35-0	35	03.547.130-0	130	03.547.275-0	275
03.547.40-0	40	03.547.135-0	135	03.547.300-0	300
03.547.50-0	50	03.547.150-0	150	03.547.325-0	325
03.547.63-0	63	03.547.175-0	175	03.547.355-0	355
03.547.80-0	80	03.547.200-0	200	03.547.400-0	400
03.547.100-0	100	03.547.225-0	225	03.547.425-0	425
03.547.125-0	125	03.547.250-0	250	03.547.500-0	500

StripsMega

549

32 V

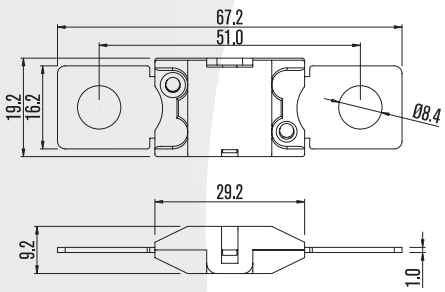

5/50

Art.	A
03.549.100-0	100
03.549.125-0	125
03.549.150-0	150
03.549.175-0	175
03.549.200-0	200
03.549.225-0	225
03.549.250-0	250

20

32 V

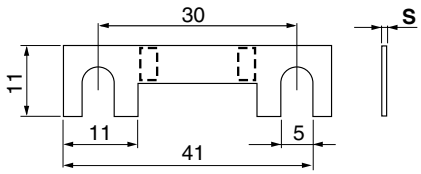

100/1000

Art.	A
03.20.30-0	30
03.20.40-0	40
03.20.50-0	50
03.20.60-0	60
03.20.70-0	70
03.20.80-0	80
03.20.100-0	100

21

DIN-72581/2

32 V

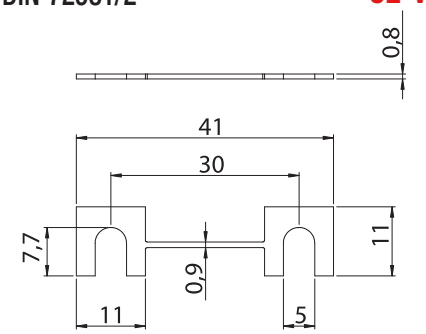

100/1000

Art.	A
03.21.30-0	30
03.21.40-0	40
03.21.50-0	50
03.21.60-0	60
03.21.80-0	80
03.21.100-0	100

22

DIN-72581/2

32 V

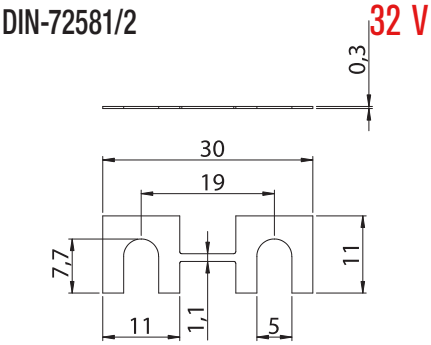

100/1000

Art.	A
03.22.30-0	30
03.22.40-0	40

23

FIAT-OM

32 V

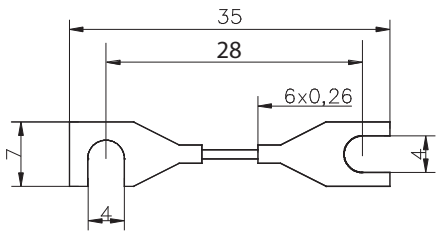

100/1000

Art.	A
03.23.25-0	25

AUTO

550

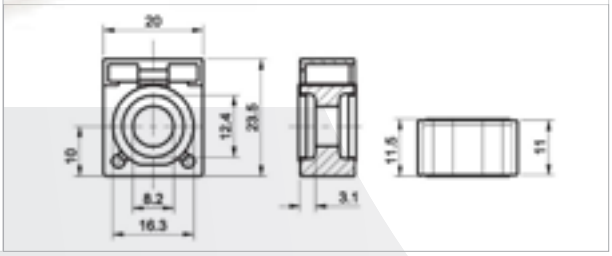

58 V

5/50

Art.	A
03.550.050-0	50
03.550.075-0	75
03.550.100-0	100
03.550.125-0	125
03.550.150-0	150
03.550.175-0	175
03.550.200-0	200
03.550.250-0	250
03.550.300-0	300

70

32 V

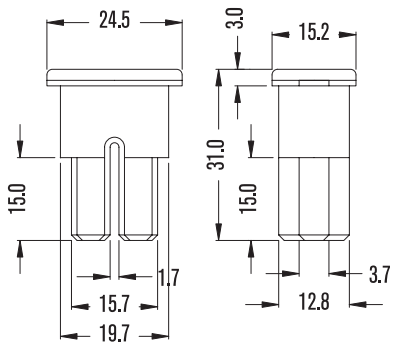

50/500

Art.	A
03.70.20-0	20
03.70.30-0	30
03.70.40-0	40
03.70.50-0	50
03.70.60-0	60
03.70.70-0	70
03.70.80-0	80
03.70.100-0	100
03.70.120-0	120

70L

LED

32 V

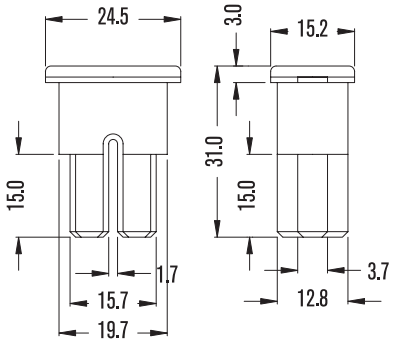

50/500

Art.	A
03.70L.20-0	20
03.70L.30-0	30
03.70L.40-0	40
03.70L.50-0	50
03.70L.60-0	60
03.70L.70-0	70
03.70L.80-0	80
03.70L.100-0	100

71

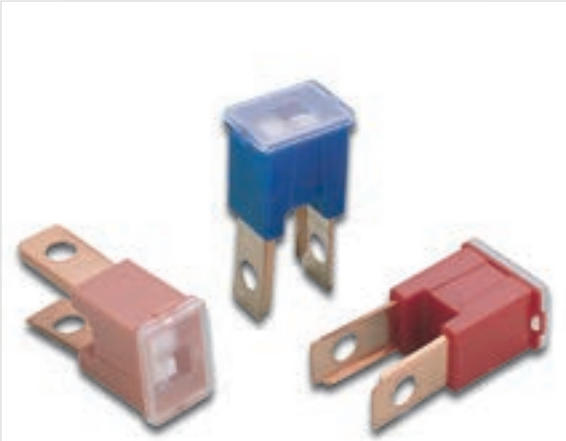

32 V

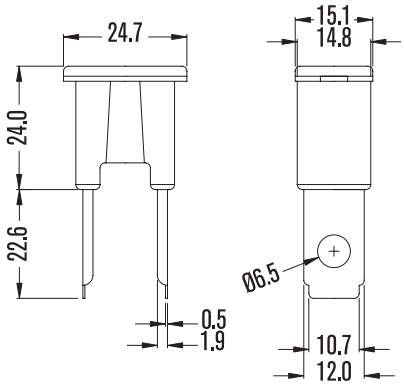

50/500

Art.	A
03.71.20-0	20
03.71.30-0	30
03.71.40-0	40
03.71.50-0	50
03.71.60-0	60
03.71.70-0	70
03.71.80-0	80
03.71.100-0	100
03.71.120-0	120

72

32 V

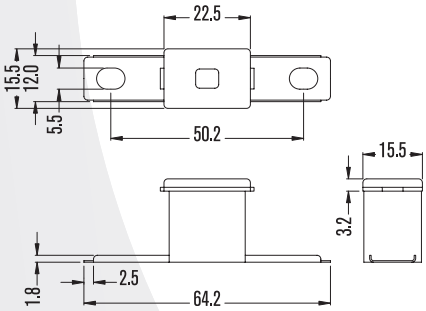

50/500

Art.	A
03.72.20-0	20
03.72.30-0	30
03.72.40-0	40
03.72.50-0	50
03.72.60-0	60
03.72.70-0	70
03.72.80-0	80
03.72.100-0	100
03.72.120-0	120

72L

LED

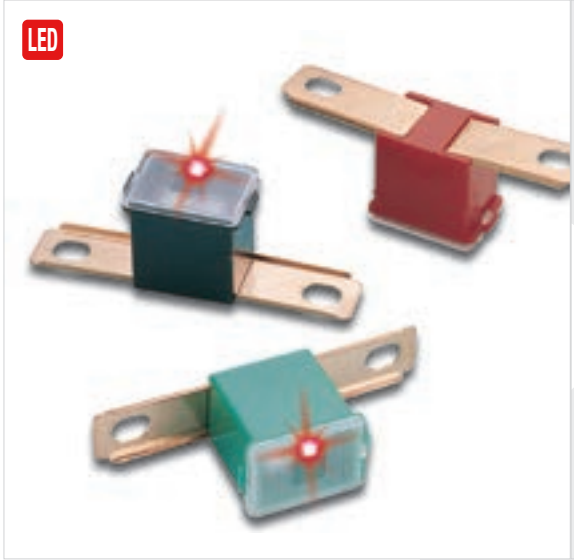

32 V

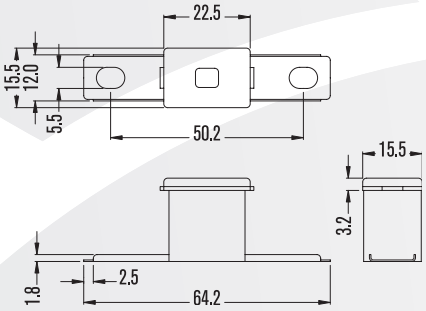

50/500

Art.	A
03.72L.20-0	20
03.72L.30-0	30
03.72L.40-0	40
03.72L.50-0	50
03.72L.60-0	60
03.72L.70-0	70
03.72L.80-0	80
03.72L.100-0	100
03.72L.120-0	120

73

32 V

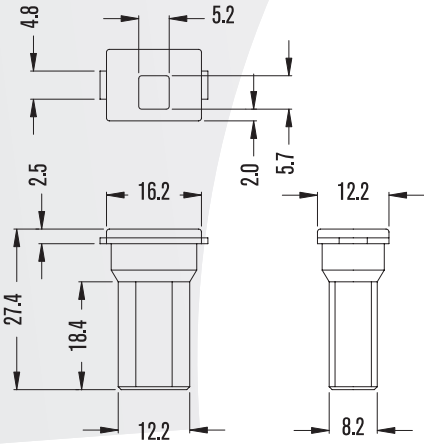

50/500

Art.	A
03.73.20-0	20
03.73.30-0	30
03.73.40-0	40
03.73.50-0	50
03.73.60-0	60
03.73.70-0	70
03.73.80-0	80

73L

LED

32 V

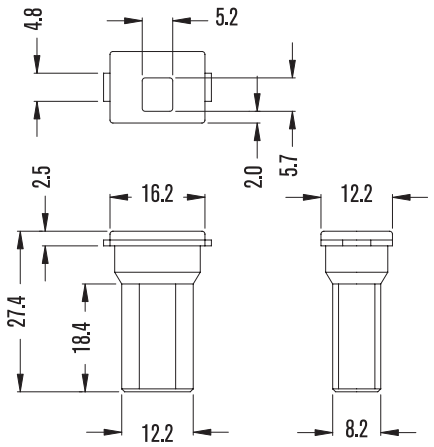

50/500

Art.	A
03.73L.20-0	20
03.73L.30-0	30
03.73L.40-0	40
03.73L.50-0	50
03.73L.60-0	60
03.73L.70-0	70
03.73L.80-0	80

74

32 V

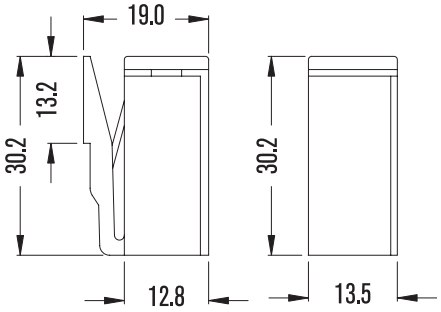

50/500

Art.	A
03.74.20-0	20
03.74.25-0	25
03.74.30-0	30
03.74.40-0	40
03.74.50-0	50
03.74.60-0	60
03.74.70-0	70
03.74.80-0	80
03.74.100-0	100

74L

LED

32 V

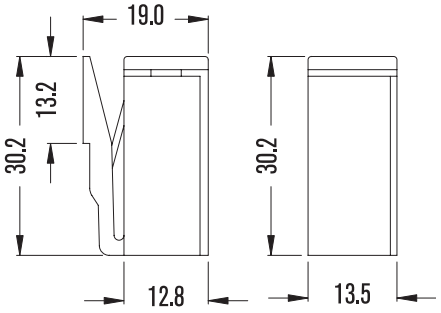

50/500

Art.	A
03.74L.25-0	25
03.74L.30-0	30
03.74L.40-0	40
03.74L.50-0	50
03.74L.60-0	60
03.74L.70-0	70
03.74L.80-0	80
03.74L.100-0	100

76

32 V

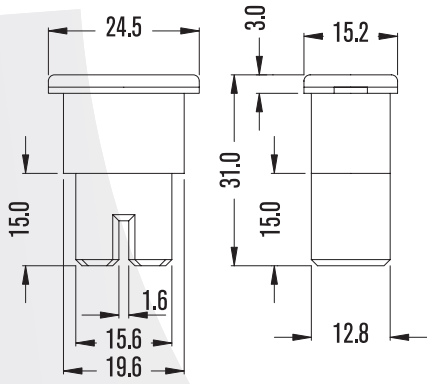

50/500

Art.	A
03.76.20-0	20
03.76.30-0	30
03.76.40-0	40
03.76.50-0	50
03.76.60-0	60
03.76.70-0	70
03.76.80-0	80
03.76.100-0	100
03.76.120-0	120

77

32 V

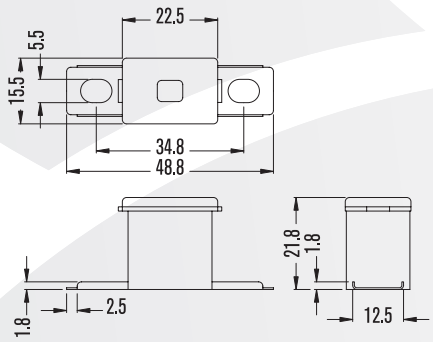

50/500

Art.	A
03.77.20-0	20
03.77.30-0	30
03.77.40-0	40
03.77.50-0	50
03.77.60-0	60
03.77.70-0	70
03.77.80-0	80
03.77.100-0	100
03.77.120-0	120

77L

LED

32 V

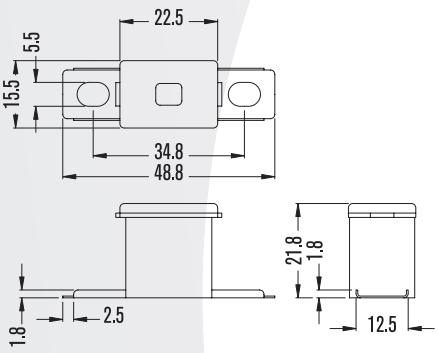

50/500

Art.	A
03.77L.20-0	20
03.77L.30-0	30
03.77L.40-0	40
03.77L.50-0	50
03.77L.60-0	60
03.77L.70-0	70
03.77L.80-0	80
03.77L.100-0	100
03.77L.120-0	120
03.77L.140-0	140

78

32 V

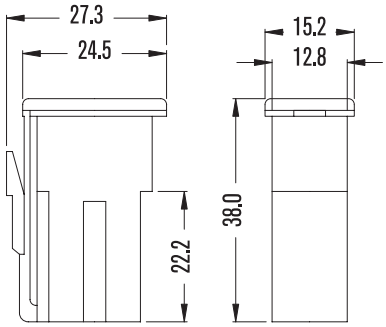

50/500

Art.	A
03.78.45-0	45
03.78.65-0	65
03.78.75-0	75

78L

LED

32 V

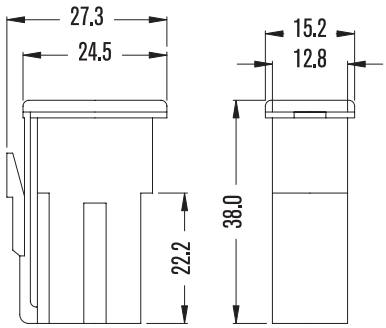

50/500

Art.	A
03.78L.45-0	45
03.78L.65-0	65
03.78L.75-0	75

79

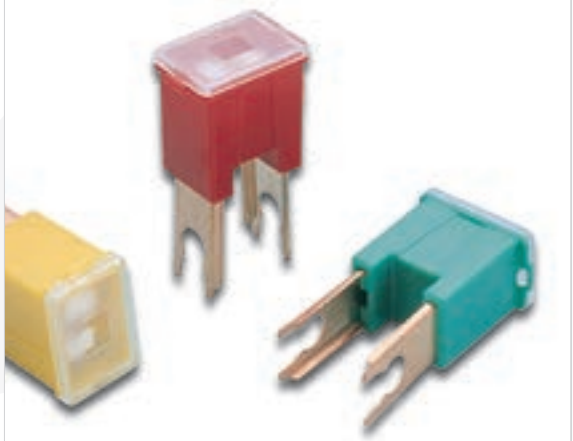

32 V

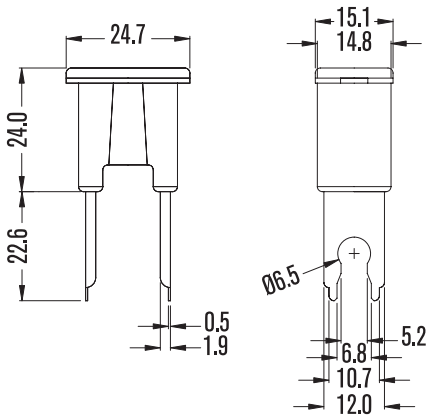

50/500

Art.	A
03.79.20-0	20
03.79.30-0	30
03.79.40-0	40
03.79.50-0	50
03.79.60-0	60
03.79.70-0	70
03.79.80-0	80
03.79.100-0	100
03.79.120-0	120

79L

LED

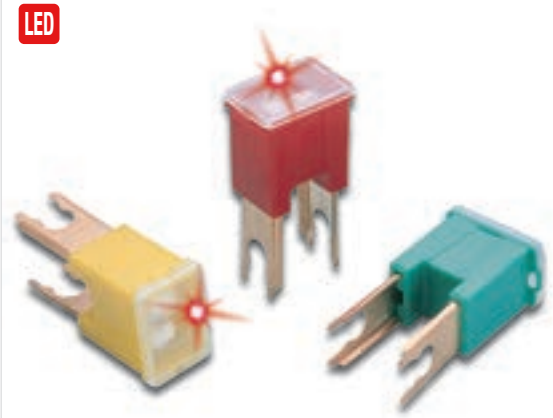

32 V

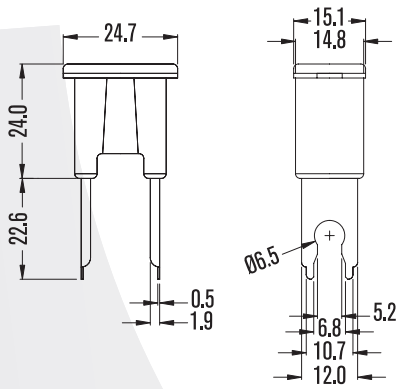

50/500

Art.	A
03.79L.20-0	20
03.79L.30-0	30
03.79L.40-0	40
03.79L.50-0	50
03.79L.60-0	60
03.79L.70-0	70
03.79L.80-0	80
03.79L.100-0	100
03.79L.120-0	120

JCASE

32 V

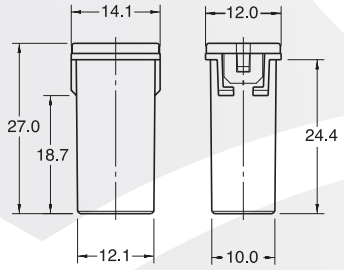

10/100

Art.	A
03.JCASE.20-0	20
03.JCASE.25-0	25
03.JCASE.30-0	30
03.JCASE.40-0	40
03.JCASE.50-0	50
03.JCASE.60-0	60

JCASE LP

32 V

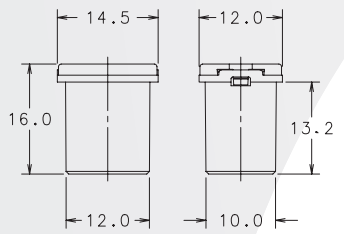

10/100

Art.	A
03.JCASELP.20-0	20
03.JCASELP.25-0	25
03.JCASELP.30-0	30
03.JCASELP.40-0	40
03.JCASELP.50-0	50
03.JCASELP.60-0	60

MCASE

32 V

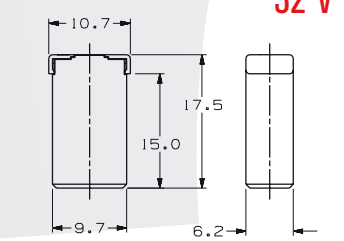

10/100

Art.	A
03.MCASE.15-0	15
03.MCASE.20-0	20
03.MCASE.25-0	25
03.MCASE.30-0	30
03.MCASE.40-0	40

30

DIN-72581 **32 V**

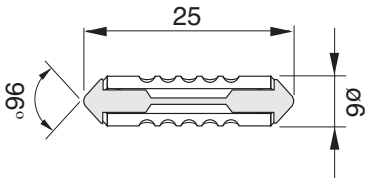

100/1000

Art.	A
03.30.05-MTA	5
03.30.08-MTA	8
03.30.16-MTA	16
03.30.25-MTA	25

DIN-72581 **32 V**

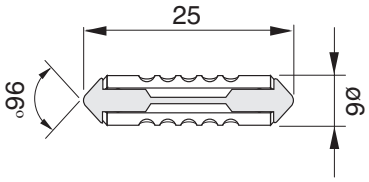

100/1000

Art.	A
03.30.05-0	5
03.30.08-0	8
03.30.16-0	16
03.30.25-0	25
03.30.40-0	40

32

BNA-709 **32 V**

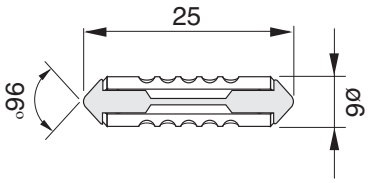

100/1000

Art.	A
03.32.05-MTA	5
03.32.08-MTA	8
03.32.10-MTA	10
03.32.16-MTA	16
03.32.25-MTA	25

BNA-709 **32 V**

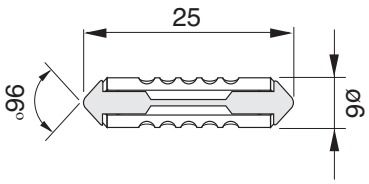

M Thermoplastic 100/1000

Art.	A
03.32.05-0	5
03.32.08-0	8
03.32.10-0	10
03.32.16-0	16
03.32.25-0	25
03.32.40-0	40

AUTO

56

OEM

FIAT 9.91806 — 32 V

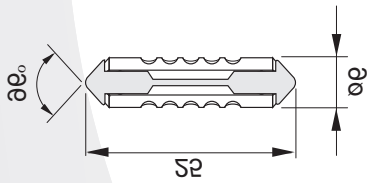

100/1000

Art.	A
03.56.05-MTA	5
03.56.08-MTA	8
03.56.16-MTA	16
03.56.25-MTA	25

FIAT 9.91806 — 32 V

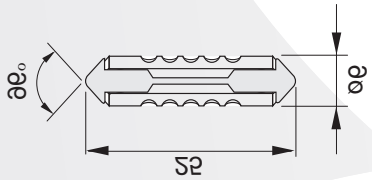

M PA 66 — 100/1000

Art.	A
03.56.05-0	5
03.56.08-0	8
03.56.10-0	10
03.56.16-0	16
03.56.25-0	25
03.56.40-0	40

6,3x30mm. quick melt

33

32 V

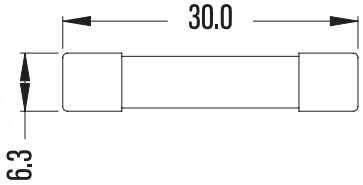

100/1000

Art.	A	Art.	A
03.33.005-0	0.5	03.33.07-0	7
03.33.01-0	1	03.33.075-0	7.5
03.33.015-0	1.5	03.33.10-0	10
03.33.02-0	2	03.33.15-0	15
03.33.025-0	2.5	03.33.20-0	20
03.33.03-0	3	03.33.25-0	25
03.33.04-0	4	03.33.30-0	30
03.33.05-0	5	03.33.35-0	35
03.33.06-0	6	03.33.40-0	40

10x38mm. quick melt

65

32 V

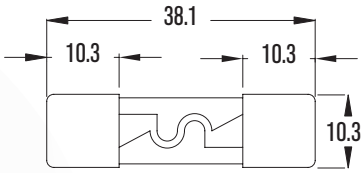

5/50

Art.	A	Art.	A
03.65.01-0	1	03.65.25-0	25
03.65.02-0	2	03.65.30-0	30
03.65.04-0	4	03.65.35-0	35
03.65.05-0	5	03.65.40-0	40
03.65.06-0	6	03.65.45-0	45
03.65.075-0	7,5	03.65.50-0	50
03.65.10-0	10	03.65.60-0	60
03.65.12-0	12	03.65.70-0	70
03.65.15-0	15	03.65.80-0	80
03.65.20-0	20	03.65.500-1	500

65L

LED

32 V

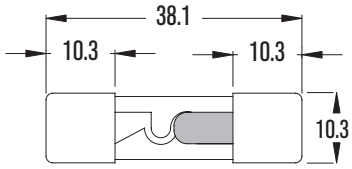

5/50

Art.	A	Art.	A
03.65L.10-0	10	03.65L.35-0	35
03.65L.12-0	12	03.65L.40-0	40
03.65L.15-0	15	03.65L.45-0	45
03.65L.20-0	20	03.65L.50-0	50
03.65L.25-0	25	03.65L.60-0	60
03.65L.30-0	30	03.65L.70-0	70

AUTO

45RM manual reset

OEM

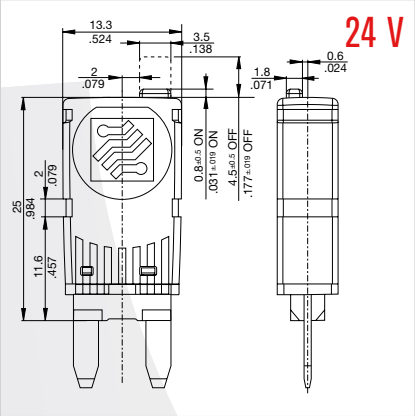

5/50

Art.	A
03.45RM.05-0	5
03.45RM.075-0	7.5
03.45RM.10-0	10
03.45RM.15-0	15
03.45RM.20-0	20
03.45RM.25-0	25
03.45RM.30-0	30

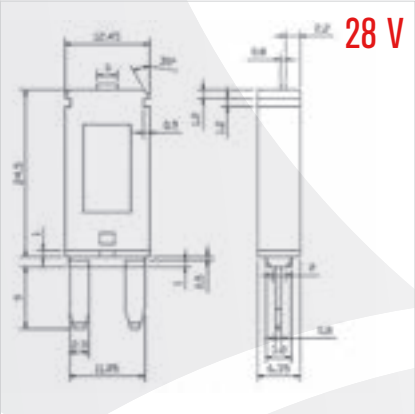

5/50

Art.	A
03.45RM.05-E	5
03.45RM.075-E	7.5
03.45RM.10-E	10
03.45RM.15-E	15
03.45RM.20-E	20
03.45RM.25-E	25
03.45RM.30-E	30

45RA automatic reset

OEM

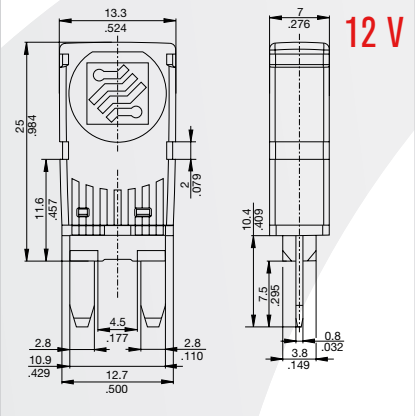

5/50

Art.	A
03.45RA.05-0	5
03.45RA.075-0	7.5
03.45RA.10-0	10
03.45RA.15-0	15
03.45RA.20-0	20
03.45RA.25-0	25
03.45RA.30-0	30

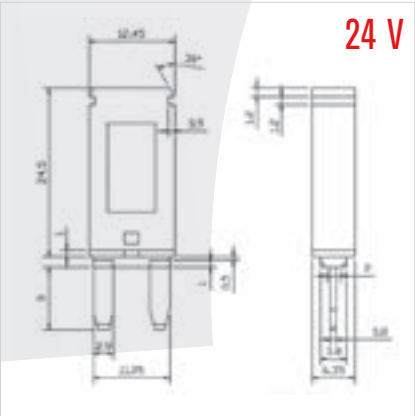

5/50

Art.	A
03.45RA.05-E	5
03.45RA.075-E	7.5
03.45RA.10-E	10
03.45RA.15-E	15
03.45RA.20-E	20
03.45RA.25-E	25
03.45RA.30-E	30

45RR Manual with break mechanism

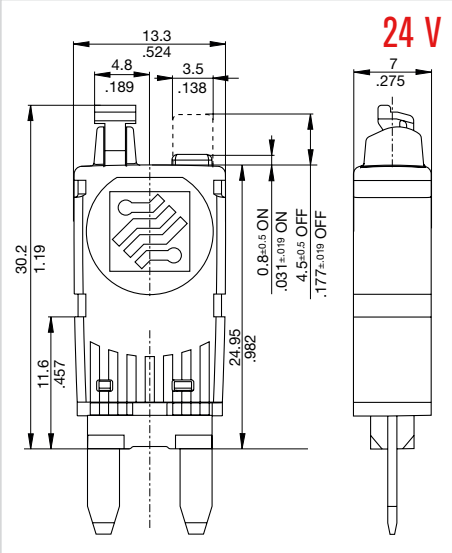

5/50

Art.	A
03.45RR.05-0	5
03.45RR.075-0	7.5
03.45RR.10-0	10
03.45RR.20-0	20
03.45RR.25-0	25
03.45RR.30-0	30

AUTO

Uni circuit breakers

40RM manual reset

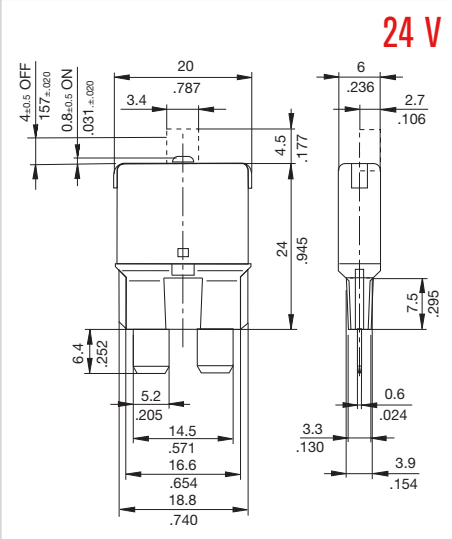

5/50

Art.	A
03.40RM.05-0	5
03.40RM.06-0	6
03.40RM.08-0	8
03.40RM.10-0	10
03.40RM.15-0	15
03.40RM.20-0	20
03.40RM.25-0	25
03.40RM.30-0	30

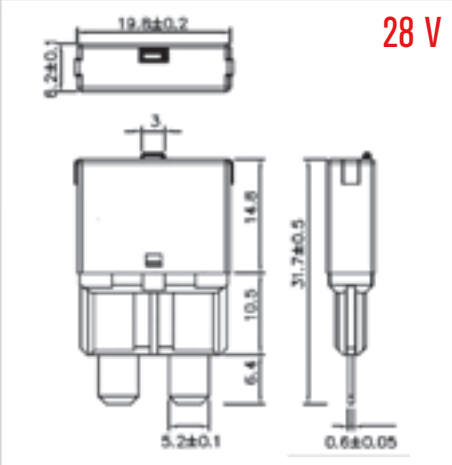

5/50

Art.	A
03.40RM.05-E	5
03.40RM.075-E	7,5
03.40RM.10-E	10
03.40RM.15-E	15
03.40RM.20-E	20
03.40RM.25-E	25
03.40RM.30-E	30

AUTO

40RA automatic reset

OEM

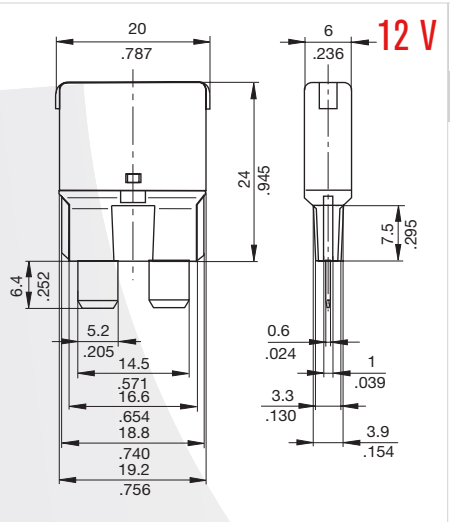

Color: ■ Negro. 5/50

Art.	A
03.40RA.05-0	5
03.40RA.06-0	6
03.40RA.08-0	8
03.40RA.10-0	10
03.40RA.15-0	15
03.40RA.20-0	20
03.40RA.25-0	25
03.40RA.30-0	30

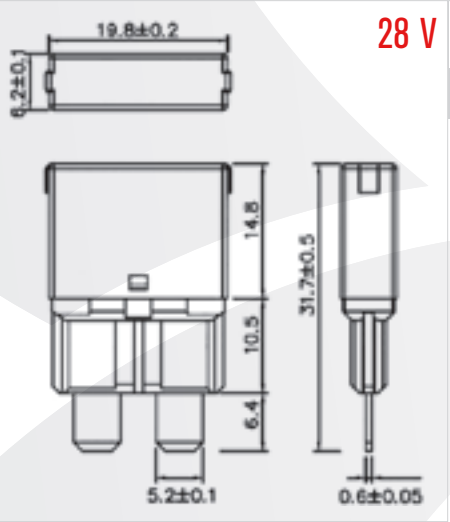

5/50

Art.	A
03.40RA.05-E	5
03.40RA.075-E	7,5
03.40RA.10-E	10
03.40RA.15-E	15
03.40RA.20-E	20
03.40RA.25-E	25
03.40RA.30-E	30

40RR Manual with break machanism

OEM

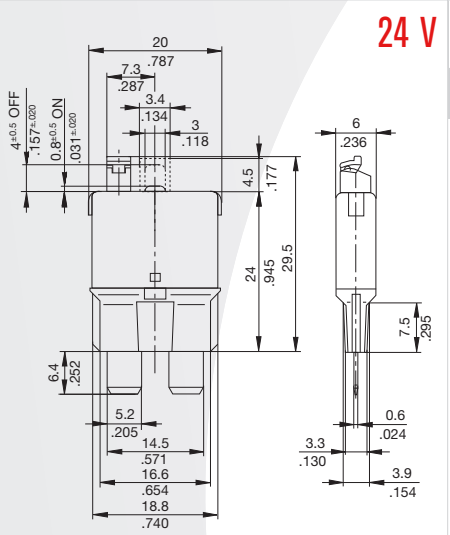

5/50

Art.	A
03.40RR.05-0	5
03.40RR.06-0	6
03.40RR.08-0	8
03.40RR.10-0	10
03.40RR.15-0	15
03.40RR.20-0	20
03.40RR.25-0	25
03.40RR.30-0	30

551 - 6.35 x 0.8 mm

Pb 80 V

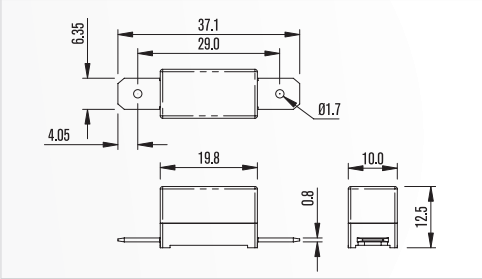

5/50

Art.	A	Art.	A	Art.	A
03.551.500-0	500 mA	03.551.03-0	3A	03.551.12-0	12A
03.551.630-0	630 mA	03.551.0315-0	3.15A	03.551.15-0	15A
03.551.800-0	800 mA	03.551.04-0	4A	03.551.20-0	20A
03.551.01-0	1A	03.551.05-0	5A	03.551.25-0	25A
03.551.0125-0	1.25A	03.551.06-0	6A	03.551.30-0	30A
03.551.016-0	1.6A	03.551.063-0	6.3A	03.551.40-0	40A
03.551.02-0	2A	03.551.08-0	8A		
03.551.025-0	2.5A	03.551.10-0	10A		

552 - 6.35 x 0.8 mm

Pb 80 V

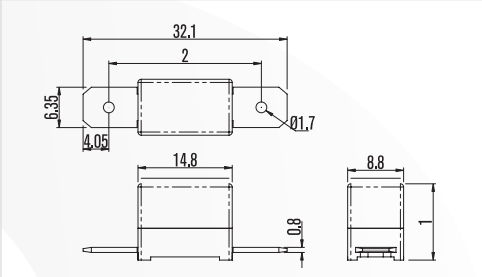

5/50

Art.	A	Art.	A	Art.	A
03.552.500-0	500 mA	03.552.02-0	2A	03.552.06-0	6A
03.552.630-0	630 mA	03.552.025-0	2.5A	03.552.063-0	6.3A
03.552.800-0	800 mA	03.552.03-0	3A	03.552.08-0	8A
03.552.01-0	1A	03.552.0315-0	3.15A	03.552.10-0	10A
03.552.0125-0	1.25A	03.552.04-0	4A	03.552.12-0	12A
03.552.016-0	1.6A	03.552.05-0	5A	03.552.15-0	15A

553 - 4.8 x 0.8 mm

Pb 80 V

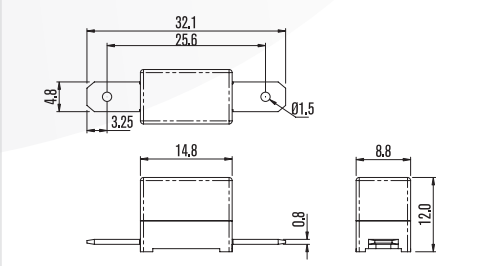

5/50

Art.	A	Art.	A	Art.	A
03.553.500-0	500 mA	03.553.02-0	2A	03.553.06-0	6A
03.553.630-0	630 mA	03.553.025-0	2.5A	03.553.063-0	6.3A
03.553.800-0	800 mA	03.553.03-0	3A	03.553.08-0	8A
03.553.01-0	1A	03.553.0315-0	3.15A	03.553.10-0	10A
03.553.0125-0	1.25A	03.553.04-0	4A	03.553.12-0	12A
03.553.016-0	1.6A	03.553.05-0	5A	03.553.15-0	15A

EZfus - slow melt

555

80 V

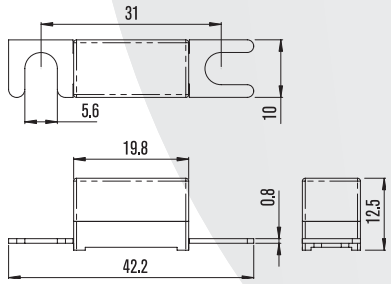

5/50

Art.	A	Art.	A	Art.	A
03.555.800-0	800 mA	03.555.063-0	6.3A	03.555.30-0	30A
03.555.01-0	1A	03.555.07-0	7A	03.555.35-0	35A
03.555.0125-0	1.25A	03.555.08-0	8A	03.555.40-0	40A
03.555.016-0	1.6A	03.555.10-0	10A	03.555.50-0	50A
03.555.02-0	2A	03.555.12-0	12A	03.555.60-0	60A
03.555.025-0	2.5A	03.555.15-0	15A	03.555.70-0	70A
03.555.0315-0	3.15A	03.555.16-0	16A	03.555.80-0	80A
03.555.04-0	4A	03.555.20-0	20A	03.555.100-0	100A
03.555.05-0	5A	03.555.25-0	25A		

Relays

12 V

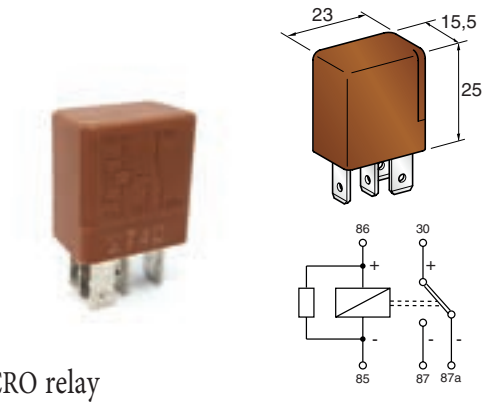

MICRO relay

Art.	M	A	
06.03000-0	PA	10 (NC) - 20 (NO)	1

12 V

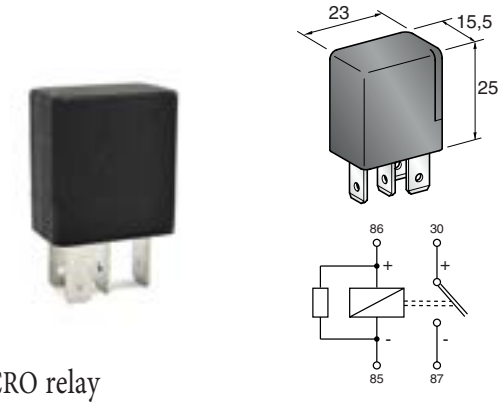

MICRO relay

Art.	M	A	
06.03010-0	PA	20	1

12 V

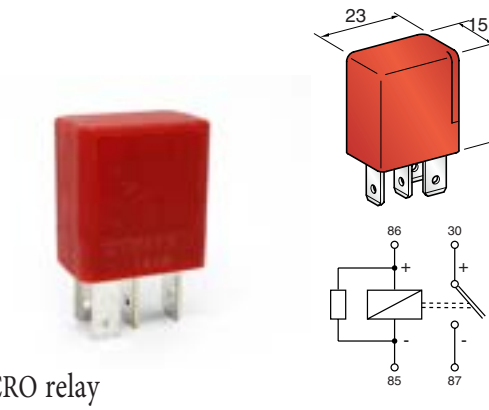

MICRO relay

Art.	M	A	
06.03020-0	PA	30	1

12 V

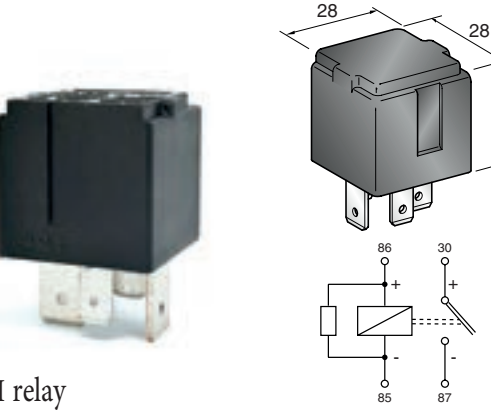

MAXI relay

Art.	M	A	
06.03050-0	PA	50	1

1518 automatic reset

6-24 V

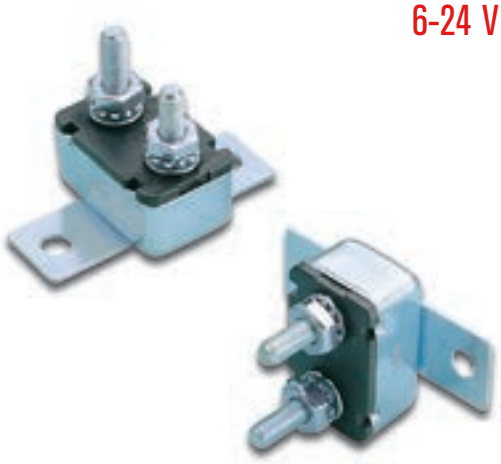

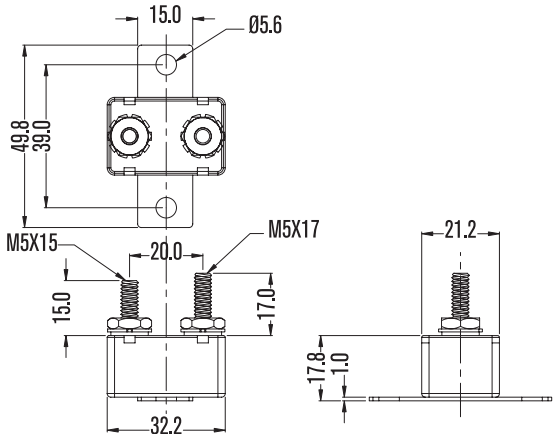

5/50

Art.	A
03.1518-6A	6
03.1518-8A	8
03.1518-10A	10
03.1518-15A	15
03.1518-20A	20
03.1518-25A	25
03.1518-30A	30
03.1518-40A	40
03.1518-50A	50

1519 automatic reset

6-24 V

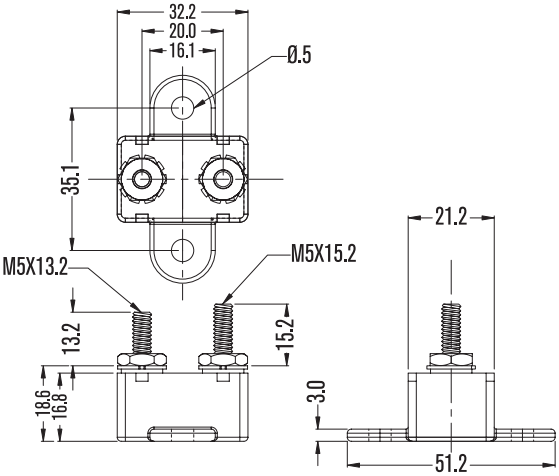

5/50

Art.	A
03.1519-10A	10
03.1519-15A	15
03.1519-20A	20
03.1519-25A	25
03.1519-30A	30
03.1519-40A	40
03.1519-50A	50

1520 automatic reset

6-24 V

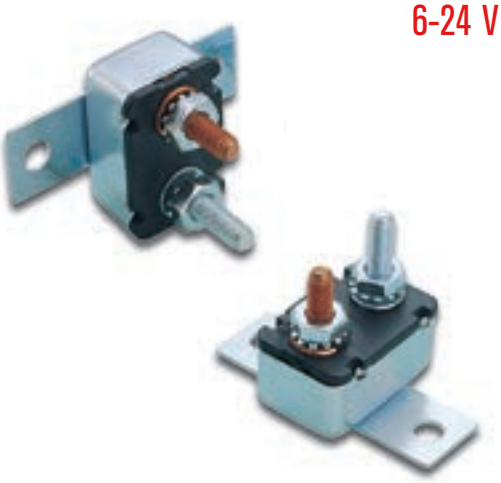

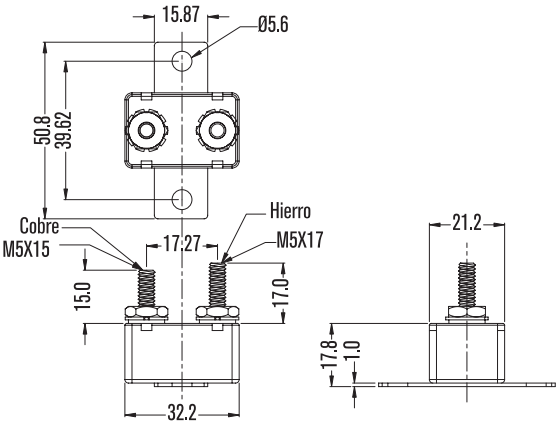

5/50

Art.	A
03.1520-6A	6
03.1520-8A	8
03.1520-10A	10
03.1520-15A	15
03.1520-20A	20
03.1520-25A	25
03.1520-30A	30
03.1520-40A	40
03.1520-50A	50

1522 automatic reset

6-24 V

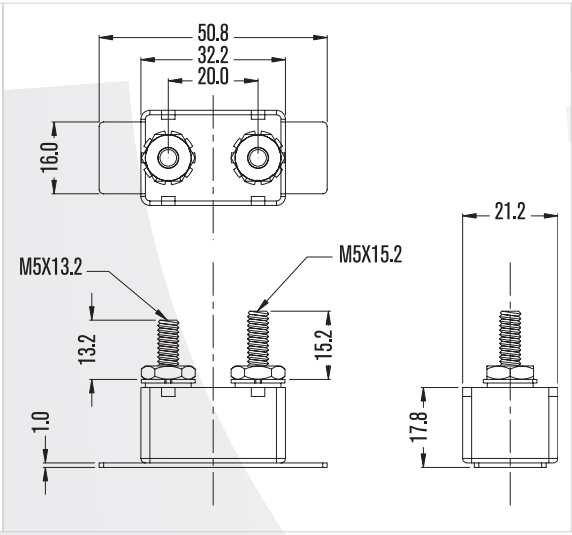

5/50

Art.	A
03.1522-6A	6
03.1522-8A	8
03.1522-10A	10
03.1522-15A	15
03.1522-20A	20
03.1522-25A	25
03.1522-30A	30
03.1522-40A	40
03.1522-50A	50

1528 automatic reset

6-24 V

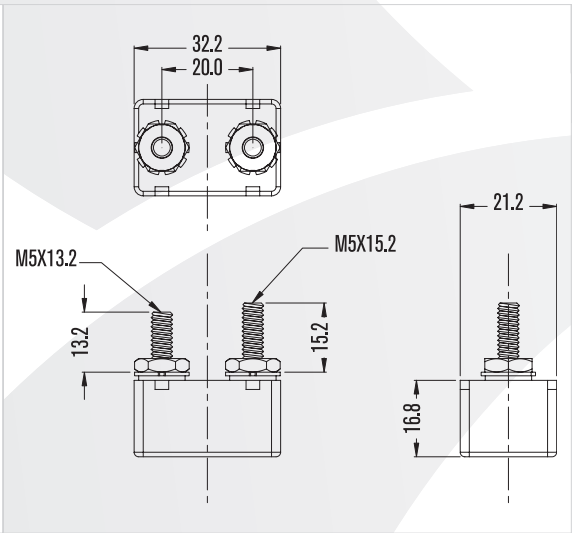

5/50

Art.	A
03.1528-10A	10
03.1528-15A	15
03.1528-20A	20
03.1528-25A	25
03.1528-30A	30
03.1528-40A	40
03.1528-50A	50

1530 automatic reset

6-24 V

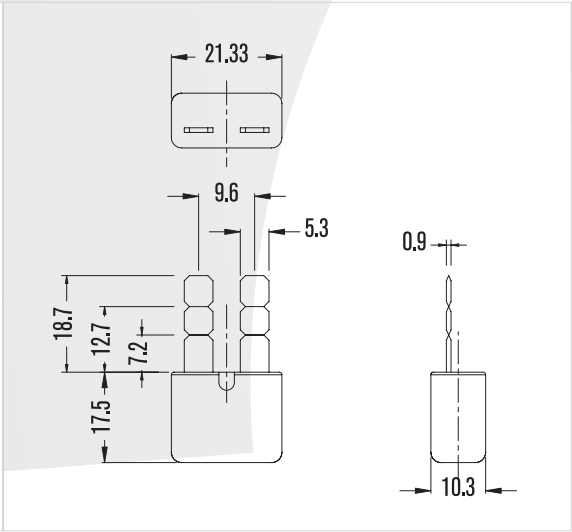

5/50

Art.	A
03.1530-10A	10
03.1530-15A	15
03.1530-20A	20
03.1530-25A	25
03.1530-30A	30
03.1530-40A	40
03.1530-50A	50

1529 automatic reset

6-24 V

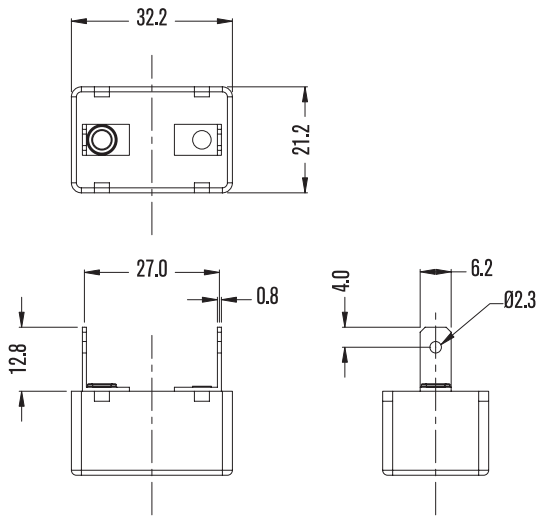

5/50

Art.	A
03.1529-6A	6
03.1529-8A	8
03.1529-10A	10
03.1529-15A	15
03.1529-20A	20
03.1529-25A	25
03.1529-30A	30
03.1529-40A	40
03.1529-50A	50

1524 automatic reset

6-24 V

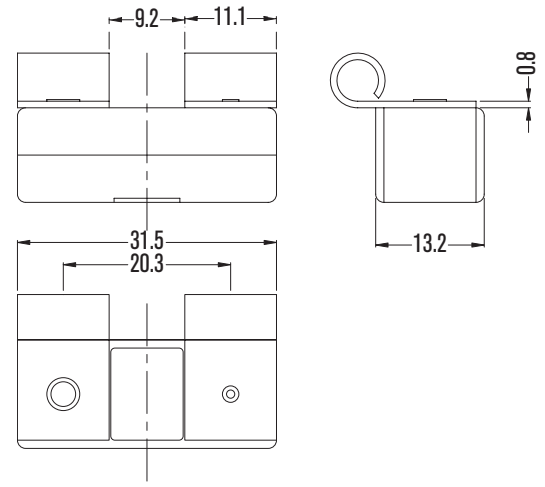

5/50

Art.	A
03.1524-10A	10
03.1524-15A	15
03.1524-20A	20
03.1524-25A	25
03.1524-30A	30
03.1524-40A	40
03.1524-50A	50

1525 automatic reset

6-24 V

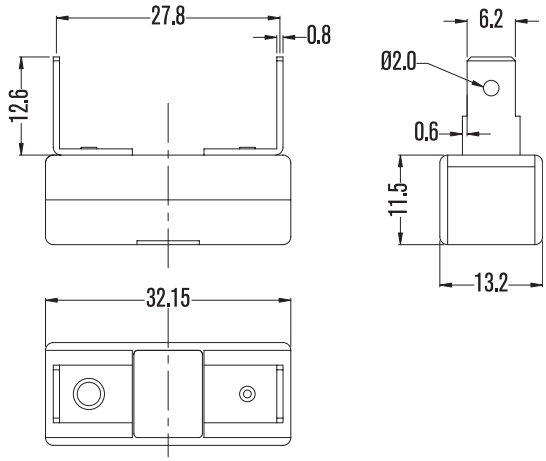

5/50

Art.	A
03.1525-10A	10
03.1525-15A	15
03.1525-20A	20
03.1525-25A	25
03.1525-30A	30
03.1525-40A	40
03.1525-50A	50

1526 modified automatic reset

6-24 V

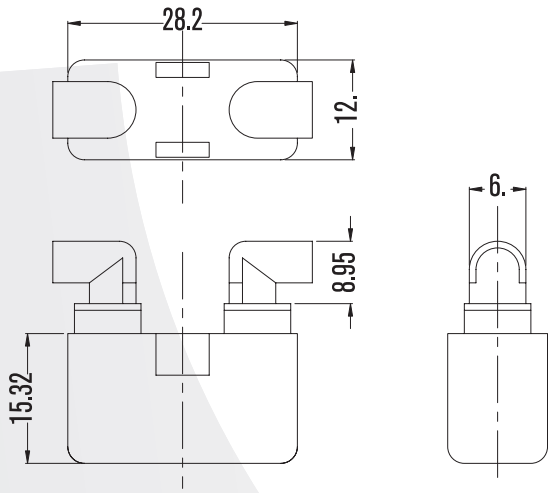

5/50

Art.	A
03.1526-10A	10
03.1526-15A	15
03.1526-20A	20
03.1526-25A	25
03.1526-30A	30
03.1526-40A	40
03.1526-50A	50

1527 modified automatic reset

6-24 V

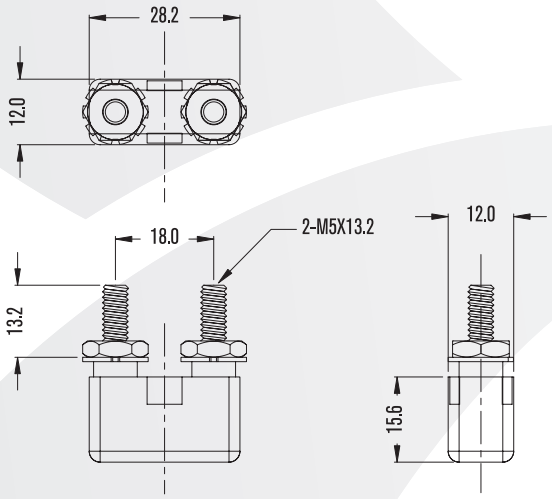

5/50

Art.	A
03.1527-6A	6
03.1527-8A	8
03.1527-10A	10
03.1527-15A	15
03.1527-20A	20
03.1527-25A	25
03.1527-30A	30
03.1527-40A	40
03.1527-50A	50

1523 modified automatic reset

6-24 V

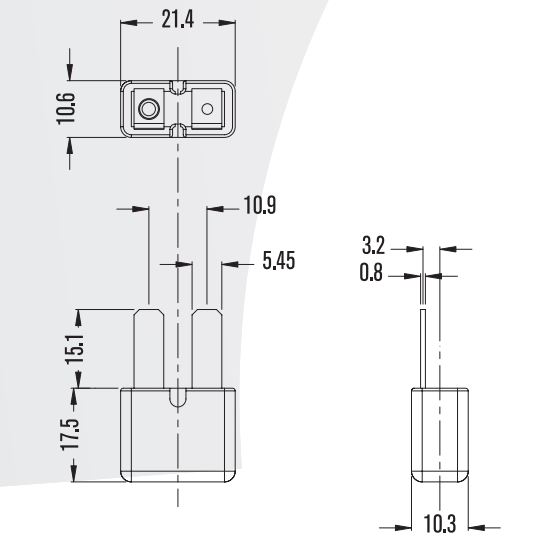

5/50

Art.	A
03.1523-10A	10
03.1523-15A	15
03.1523-20A	20
03.1523-25A	25
03.1523-30A	30
03.1523-40A	40
03.1523-50A	50

1521 manual reset

6-24 V

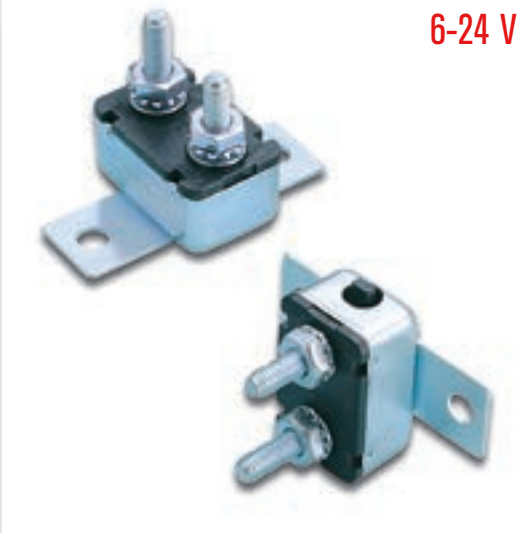

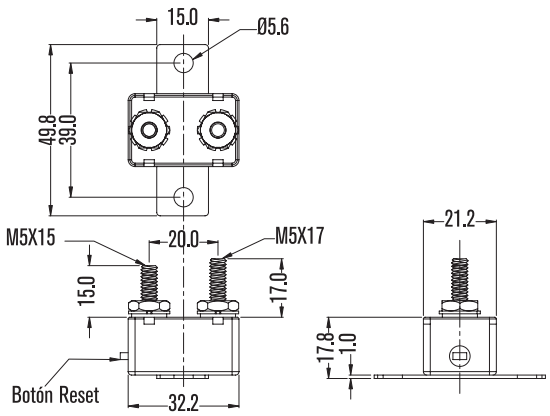

5/50

Art.	A
03.1521-6A	6
03.1521-8A	8
03.1521-10A	10
03.1521-15A	15
03.1521-20A	20
03.1521-25A	25
03.1521-30A	30
03.1521-40A	40
03.1521-50A	50

AUTO

Fuse holder

For: 03.49

Art.	mm²	M	IP	
03.149-0	2,50	PVC	67	25/250

For: 03.493

33.1069C-0 M PA 25/250

Art.	mm²
03.1069-0	1,50
03.1069/2-0	4,00

For: 03.45 / 03.45L

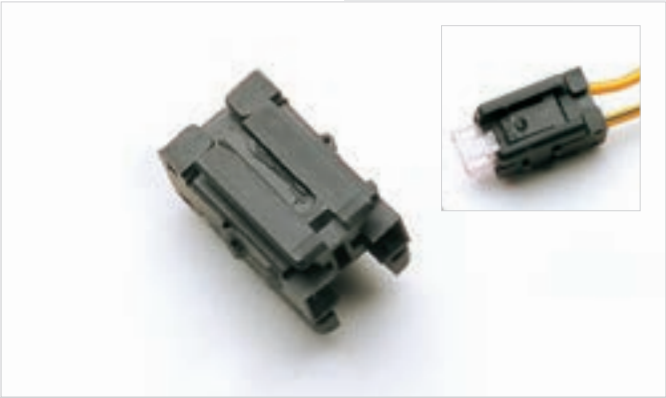

Art.	M	
03.110-0	PA 66	25/250

Art.	mm²	M	IP	
03.111B-0	4,00	PVC	67	25/500

For: 03.45 / 03.45L

Art.	mm²	M	IP	
03.111L-0	4,00	PVC	67	25/250

Art.	M	
03.1101-0	Thermoplastic	100/1000

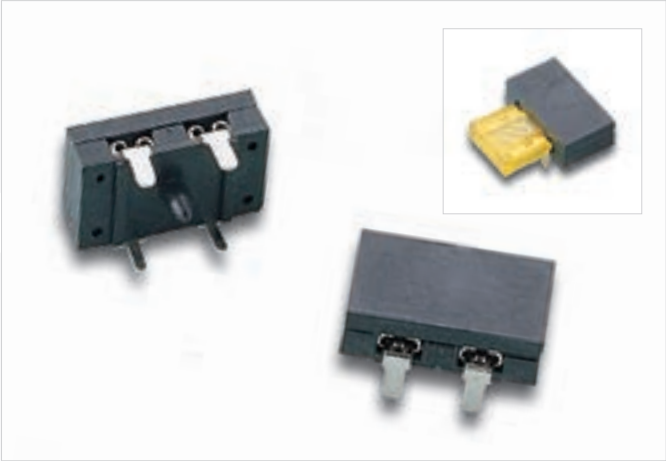

Art.	M	
03.1102-0	Thermoplastic	100/1000

Art.	M	
03.141-0	Sn CuSn6	100/1000

Art.	M	
03.143-0	Sn CuSn6	100/1000

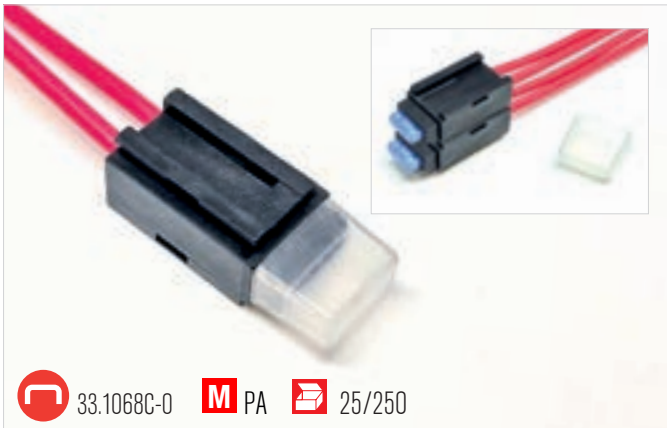

33.1068C-0 M PA 25/250

Art.	mm²
03.1068-0	1,50
03.1068/2-0	4,00

AUTO

Fuse holder

For: 03.45 / 03.45L

Art.	V	M	
03.1995MI-L	10	PBT	1

For: 03.47

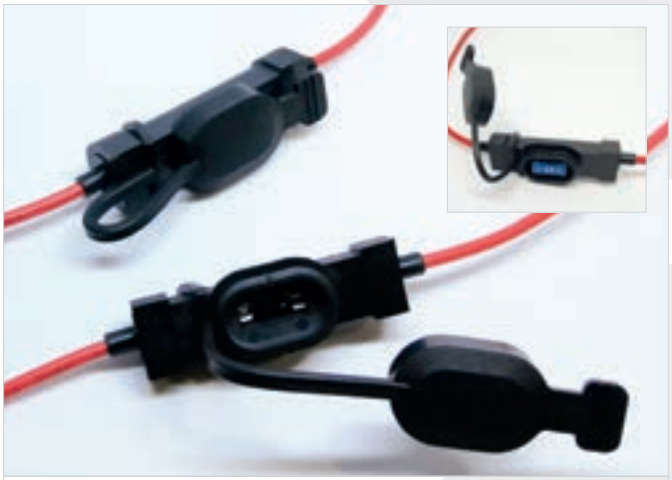

M PA IP 66 25/250

Art.	mm²
03.4712-0	3,31
03.4714-0*	1,31
03.4718-0*	0,823
03.4720-0*	0,519

Art.	V	M	
03.1995LP-L	10	PBT	1

For: 03.40

M PA IP 50 25/250

Art.	mm²
03.112-0	4,00
03.139-0	4,00

Art.	mm²	M	
03.113-0	4,00	PA	25/250

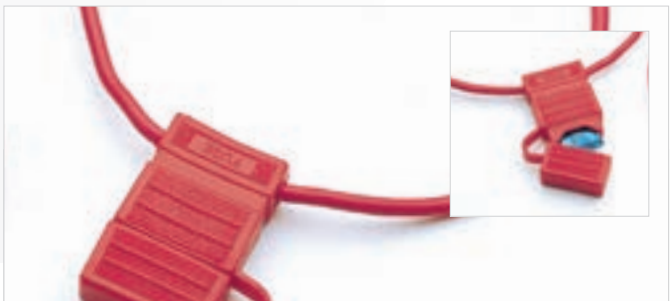

M PVC IP 67 25/250

Art.	mm²
03.114-0	4,00
03.114-16	1,50

M PVC IP 67 25/250

Art.	mm²
03.114B-0	4,00
03.114B-0-6	6,00
03.114B-16	1,50

Art.	mm²	M	
03.114L-0	4,00	PVC	25/250

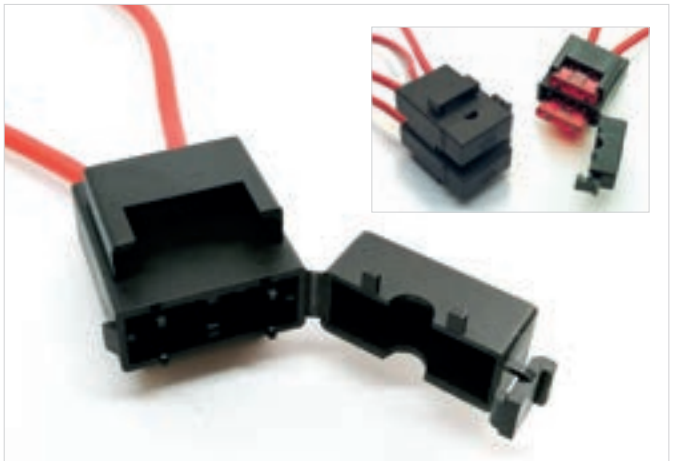

Art.	mm²	M	
03.115-0	2,50	PA	25/250

AUTO

Fuse holder

For: 03.40

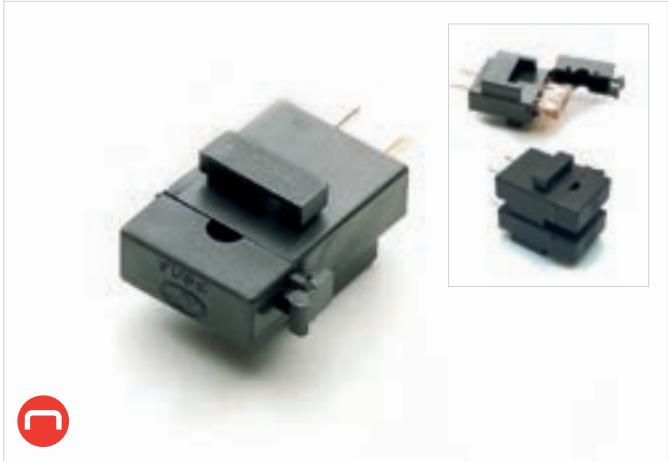

Art.	M	
03.116-0	PA	25/250

M PA 66 25/250

Art.	A
03.126-0-NG*	1
03.126-0-BE*	5
03.126-0-MA*	7,5
03.126-0-RO*	10
03.126-0-AZ*	15
03.126-0	20
T 03.126-0-NT*	25
03.126-0-VE*	30

Art.	mm²	M	
03.127-0	1,50	PA 66	25/250

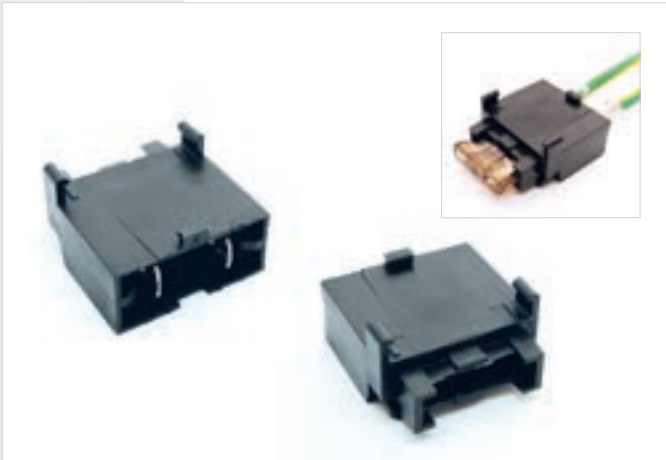

Art.	M	
03.128-0	PA 66	25/250

For: 03.40

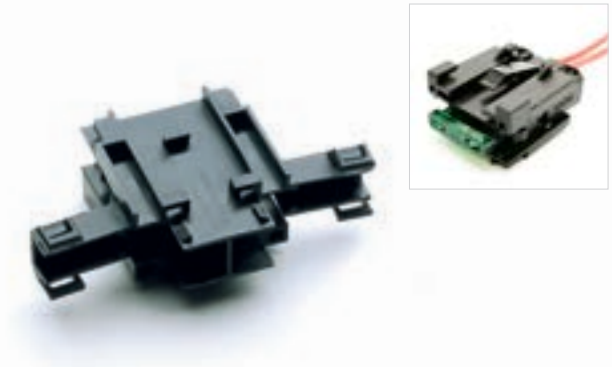

without terminals

Art.	M	
03.129-0	PA 66	25/250

Art.	M	
03.130-0	PA 66	25/250

Art.	M	
03.131-0	PA 66	25/250

Art.	M	
03.132-0	PA 66	25/250

T 03.05917-0 | 33.05539-0 | M PA 66 | 25/250

Art.

03.133-0	Body + T +
03.133-C	Body

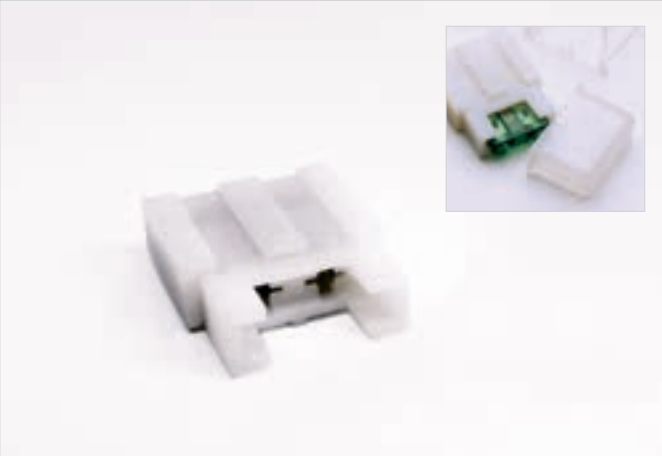

Art.	M	
03.134-0	PA 66	25/250

AUTO

Fuse holder

For: 03.40

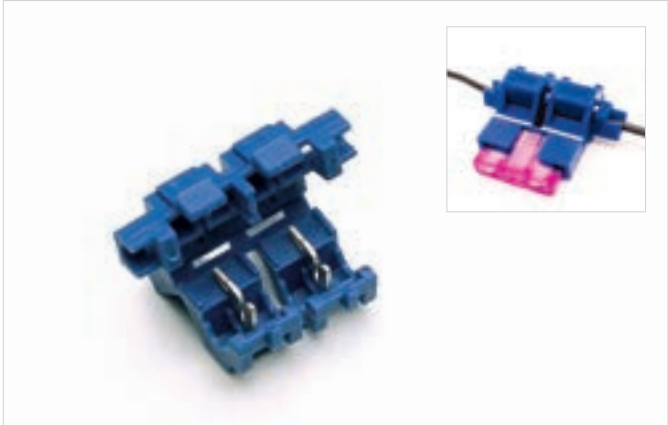

Art.	M	
03.135-0	PA	100/1000

M PVC IP 50 25/250

Art.	A	mm²
03.1905-B-0	≤30	1,50
03.1905-B-2	≤30	4,00

Art.	A	M	
03.1903-0	≤30	PA	10/100

Art.	A	M	
03.1904-0	≤30	PA	10/100

Art.	A	M	
03.1905-0	≤30	PA	10/100

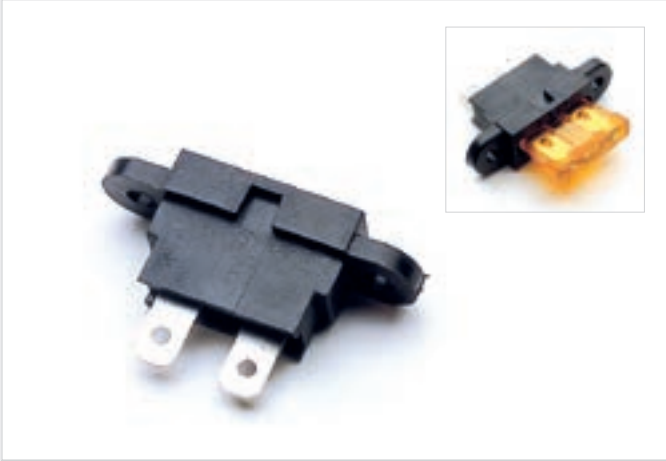

Art.	A	M	
03.1906-0	≤30	PA	10/100

For: 03.40

Art.	A	M	
03.1908-0	≤30	PA	10/100

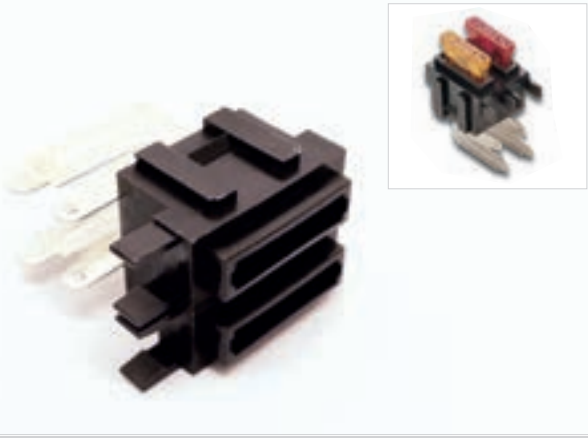

Art.	A	M	
03.1909-0	≤30	PA	10/100

Art.	A	M	
03.1910-0	≤30	PA	10/100

Art.	A	M	
03.1911-0	≤30	PA	10/100

Art.	A	M	
03.1912-0	≤30	PA	10/100

Art.	A	M	
03.1902-0	≤15	Thermoplastic	10/100

Fuse holder

For: 03.40

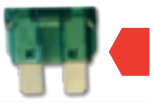

Art.	M	
03.142-0	Sn CuSn6	100/1000

Art.	M	
03.144-0	Sn CuSn6	100/1000

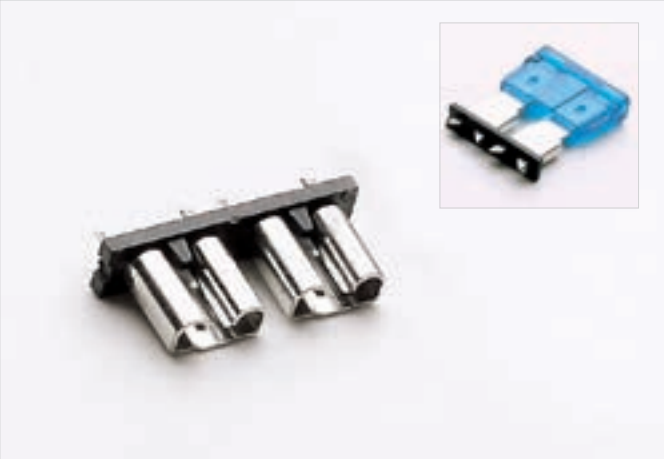

Art.	M	
03.145-0	Sn CuSn6	100/1000

Art.	V	M	
03.1995UN-L	10	PBT	1

For: 03.40

M PA 10

Art.	V
BP-0910	2
BP-0911	4
BP-0912	6
BP-0913	8
BP-0914	10
BP-0915	12

35x 03.07900-0 33.00670-0 2x 33.00690 2x 33.00691

Art.	V	M	
03.117-0	16	PA 66	1/10

12x 03.07900-0

Art.	V	M	
03.03000-0	6	PA 66	1/10

AUTO

Fuse holder

For: 03.40

16x 03.07501-0

33.00582-0

M PA 66 V 8 1/10

Art.	
03.120-0	Body + T +
03.120-C	Body + T
03.120-V	Body

12x 03.07501-0

33.00562-0

M PA 66 V 6 1/10

Art.	
03.121-0	Body + T +
03.121-C	Body + T
03.121-V	Body

8x 03.07501-0

33.00542-0

M PA 66 V 4 1/10

Art.	
03.122-0	Body + T +
03.122-C	Body + T
03.122-V	Body

33.00582-0

M PA 66 V 6 1/10

Art.	
03.123-0	body with terminals +
03.123-V	body with terminals

For: 03.40

33.00602-0

M PA 66 V 6 1/10

Art.

03.124-0 body with terminals +
03.124-V body with terminals

33.00612-0

M PA 66 V 4 1/10

Art.

03.125-0 body with terminals +
03.125-V body with terminals

Fuse holder

AUTO

For: 03.40, 03.45, 03.47, 03.49

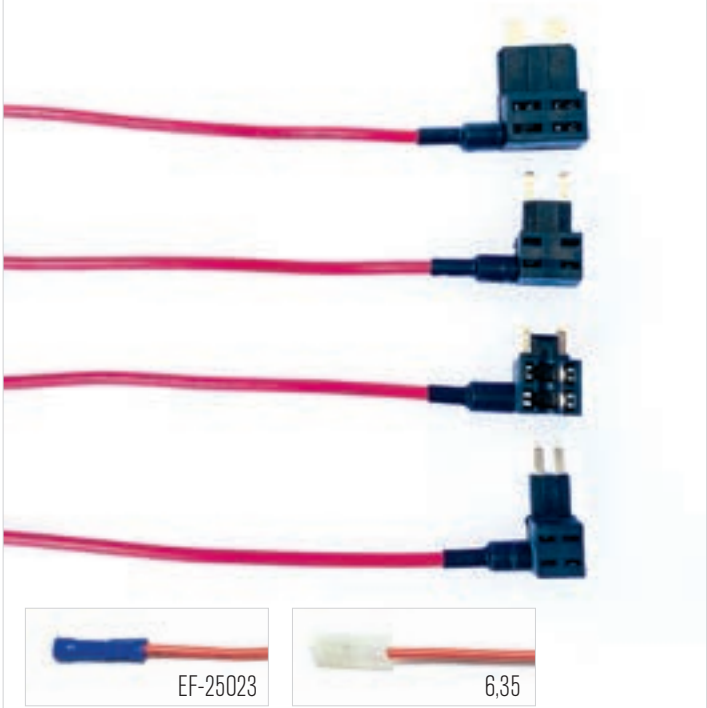

For connector EF-25023, add suffix **-0** to be reference.
For connector 6,35, add suffix **-1** to the reference.

M PA 1,50 5/25

Art. 2 pathways	Art. 3 pathways	For	
03.040	**03.340**	03.40	
03.045	**03.345**	03.45	
03.047	**03.347**	03.47	
03.049	**03.349**	03.49	

For: 03.493

M PA 1,50 5/25

Art.	C
03.3493-0	EF-25023
03.3493-1	6,35

For: 03.50

Art.	mm²	M	IP	
03.136-0	10,00	PVC	67	10/100

Art.	mm²	M	IP	
03.136B-0	10,00	PVC	67	10/100

Art.	mm²	M	IP	
03.136L-0	10,00	PVC	67	10/100

Art.	M	
03.137-0	PA 66	1

Art.	M	
03.138-0	PA 66	10/100

Art.	M	
XB-PF07	Thermoplastic	1

AUTO

Fuse holder

For: 03.50

KIT - LINK BOX

Art.	V	M	
03.00500-0	4	PA 66	1/10

LINK BOX

Art.	V	M	
03.00800-0	4	PA 66	1/10

For **03.00800-0**

03.00850-0

TD-16-6

03.202-0

44.40340

44.40310

For: 03.55, 03.60

03.00799

For 3 Midi (03.55) and 2 Mega (03.60)

Art.	
01.00750	1/10

Fuse holder

For: 03.60

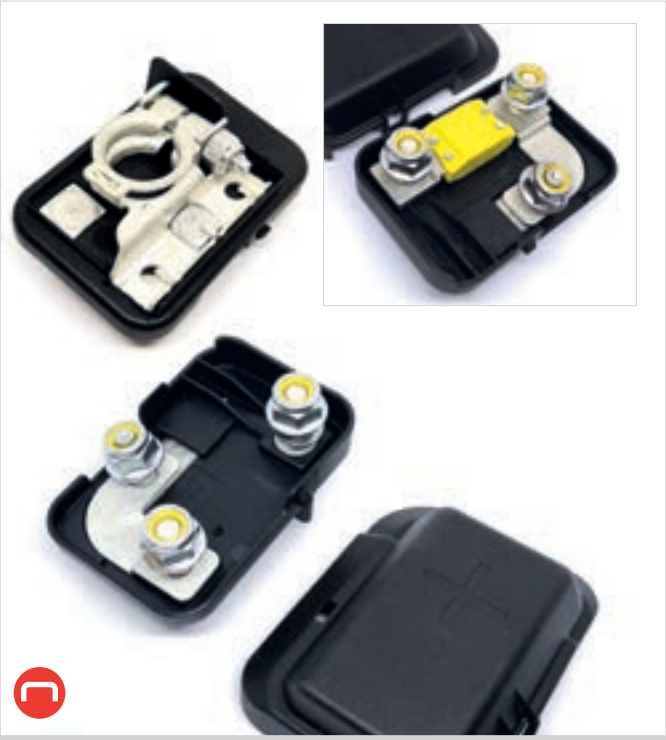

Art.	M	
03.01703-0	PBT / PP	1/10

Art.	M	
03.00703-0	PBT	1/10

For: 03.55, 03.20

Art.	M	
03.108-0	PA 66	5/50

Art.	M	
03.109-0	PA 66	5/50

For: 03.55

Art.	M	
03.01392-0	HP-2061	1/10

Art.	M	
03.00392-0	HP-2061	1/10

Art.	M	
03.1084-0	PA 66	10

Art.	M	
03.1082-0	PA 66	10

Art.	M	
03.108P4-0	CU-ZN	10

Art.	M	
03.108P2-0	CU-ZN	10

Fuse holder

For: 03.60 / 03.60C

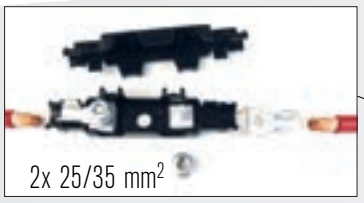

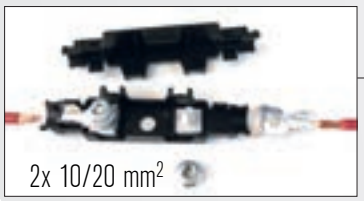

Art.	M	
03.00380-0	PA 66	1/10

Art.	M	
03.1091-0	PA 66	1/10

Art.	M	
03.1091S-0	PA 66	1/10

Art.

03.00394-0 Body +
03.01394-0 Body

For: 03.548

Art.	M	
03.01392-0	HP-2061	1/10

Art.	M	
03.00392-0	HP-2061	1/10

For: 03.547

Art.	M	
03.01391-0	HP-2061	1/10

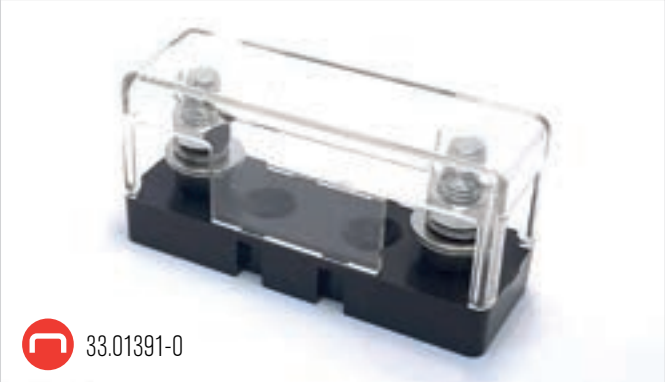

Art.	M	
03.00391-0	HP-2061	1/10

Art.	M	
03.01393-0	HP-2061	1/10

Fuse holder

AUTO

For: 03.549

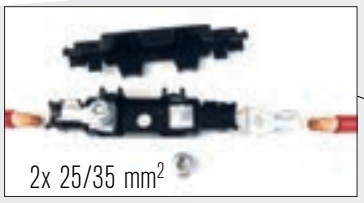

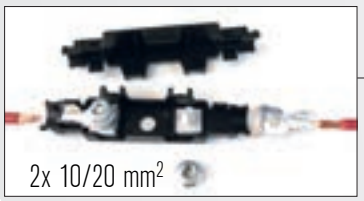

Art.	M	
03.00380-0	PA 66	1/10

Art.	M	
03.1091-0	PA 66	1/10

Art.	M	
03.1091S-0	PA 66	1/10

33.01391-0 M HP-2061 1/10

Art.

03.00394-0	Body +
03.01394-0	Body

For: 03.20 / 03.21 / 03.22 / 03.23 / 03.565

Art.	M	
03.108-0	PA 66	5/50

Art.	M	
03.109-0	PA 66	5/50

For: 03.72 / 03.72L

Art.	M	
03.00393-0	PA with fiberglass	1/10

Fuse holder

AUTO

For: 03.33

Art.	M	A	
03.570-1	ABS	20	25/250

Art.	M	A	
03.571-1	PP	10	25/250

Art.	M	A	
03.572-1	PA	30	25/250

Art.	M	A	
03.573-1	PA	20	25/250

Art.	M	A	
03.574-1	PP	5	25/250

Art.	M	A	
03.576-1	PA	40	25/250

Art.	M	A	
03.578-1	HP-2061	20	25/250

KIT

20x 11.01650-0 | 33.00670-0

Art.	M	
03.118-0	PA 66	1/10

KIT

25x 17.01940-0 / 15x 17.01655-0 | 33.00670-0

Art.	M	
03.119-0	PA 66	1/10

91,6x35mm modules

Module for 20 Mini (03.45).
M Module: PA66-MD25. Secondary Lock: PA66.

Art.		
01.01460-0	Module + 4 Secondary Lock	1
03.01460-0	Module + 4 Secondary Lock	250

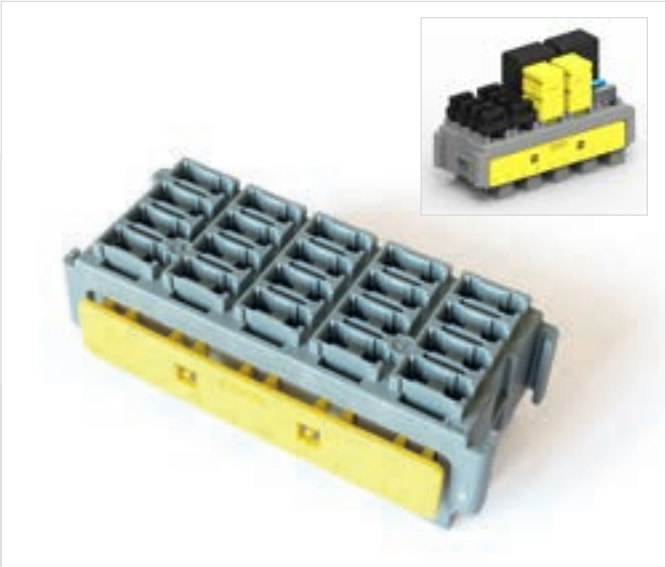

Module for 20 Mini (03.45) o 6 Microrelay 280.
M Module: PA66-M25. Secondary Lock: PA66 GF13.

Art.		
01.01698-0	Module + 1 Secondary Lock	1
03.01698-0	Module	160
33.01699-0	Secondary Lock	165/330

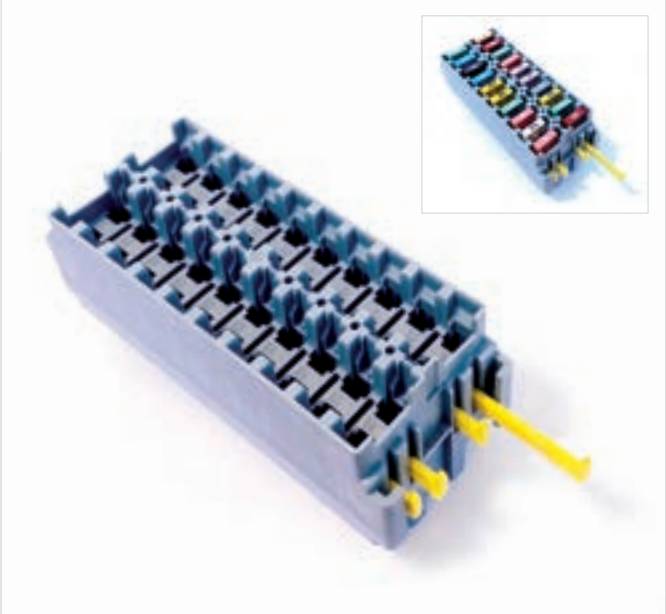

Module for 20 diodes or Mini (03.45).
M Module: PA66-MD25. Secondary Lock: PA66.

Art.		
01.01640-0	Module + 4 Secondary Lock	1
03.01640-0	Module	230
33.00793-0	Secondary Lock	1000/7000

Module for 10 Mini (03.45) y 1 Maxi Relay.
M Module: PA66-MD25. Secondary Lock: PA66.

Art.		
01.01510-0	Module + 4 Secondary Lock	1
03.01510-0	Module + 4 Secondary Lock	300

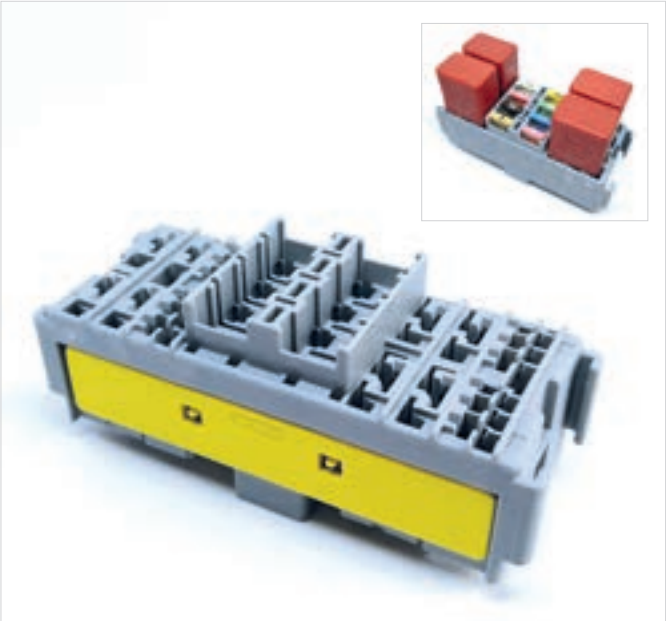

Module for 8 Mini (03.45) y 4 Micro Relay.
M Module: PA66-MD25. Secondary Lock: PA66 GF 13.

Art.		
01.01564-0	Module + 1 Secondary Lock	1
03.01564-0	Module	132
33.01566-0	Secondary Lock	150/400

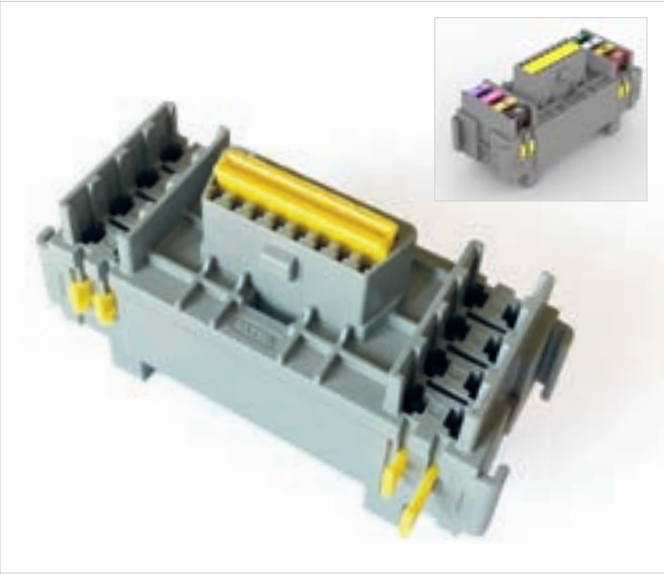

Module for 8 Mini (03.45) y 1 OBD.
M Module: PA66 GF 13. Secondary Lock: PA66.

Art.		
01.01375-0	Module + 1 SL OBD + 4 SL Mini	1
03.01375-0	Module	128
33.00791-0	Secondary Lock OBD	150/5000
33.01601-0	Secondary Lock Mini (03.45)	150/6000

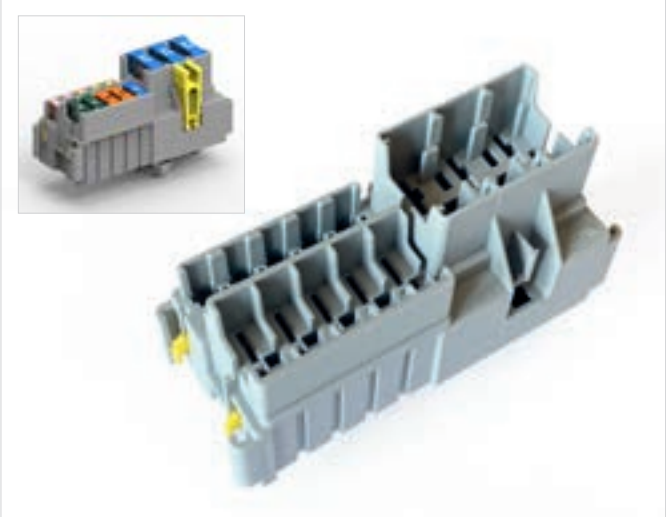

Module for 5 Mini (03.45), 5 MaxiCompact (03.50C), 3 MaxiCompactM8 (03.50C8) and clamp (03.202-0).
M Module: PA66-M25. Secondary Lock: PA66.

Art.		
01.01697-0	Module + 3 Secondary Lock	1
03.01697-0	Module	162
33.00564-0	Secondary Lock	486

Module for 4 Mini (03.45) y 2 Mini Relay..
M Module: PA66-M25. Secondary Lock: PA66 GF 13.

Art.		
01.01504-0	Module + 1 Secondary Lock	1
03.01504-0	Module	132
33.01506-0	Secondary Lock	150/400

91,6x35 mm modules

Module for 4 Mini (03.45) and 6 A1S (JASO).
M Module: PA66-M25. Secondary Lock: PA66 GF 13.

Art.		
01.01690-0	Module + 1 Secondary Lock	1
03.01690-0	Module	99
33.01691-0	Secondary Lock	100/300

Module for 6 Maxi (03.50) and clamp (03.202-0).
M PBT GF20.

Art.		
01.01470-0	Module	1
03.01470-0	Module	162

Module for 3 Maxi (03.50) and 6 Uni (03.40).
M Module: PA66-MD25. Secondary Lock: PA66.

Art.		
01.01600-0	Module + 4 SL Uni + 1 SL Maxi	1
03.01600-0	Module	100
33.01601-0	Secondary Lock Uni (03.40)	400/6000
33.01602-0	Secondary Lock Maxi (03.50)	100/2000

Module for 3 MaxiCompact (03.50C), 1 Maxi Realy and 2 Micro Relay.
M Module: PA66-M25. Secondary Lock: PA66 GF 13.

Art.		
01.01695-0	Module + 1 Secondary Lock	1
03.01695-0	Module	132
33.01696-0	Secondary Lock	150/400

Module for 6 Micro Relay.
M Module: PA66-M25. Secondary Lock: PA66 GF 13.

Art.		
01.01484-0	Module + 1 Secondary Lock	1
03.01484-0	Module	198
33.01486-0	Secondary Lock	200/400

Module for 1 Micro Relay + 1 Maxi Relay.
M Module: PA66-M25. Secondary Lock: PA66 GF 13.

Art.		
01.01494-0	Module + 1 Secondary Lock	1
03.01494-0	Module	132
33.01496-0	Secondary Lock	150/600

Module for 2 Maxi Relay.
M Module PA66-M25. Secondary Lock: PA66 GF 13.

Art.		
01.01660-0	Module + 1 Secondary Lock	1
03.01660-0	Module	132
33.01661-0	Secondary Lock	150/600

91,6x35 mm modules.

Framework for 5 modules of 91,6x35 mm.

Art.	M	
33.01450-0	PP GF30	1/85

For: **33.01450-0**

Art.	M	
33.01540-0	PP GF30	1/48

Framework for 5 modules of 91,6x35 mm.

Art.	M	
33.01706-0	PP GF30	1/50

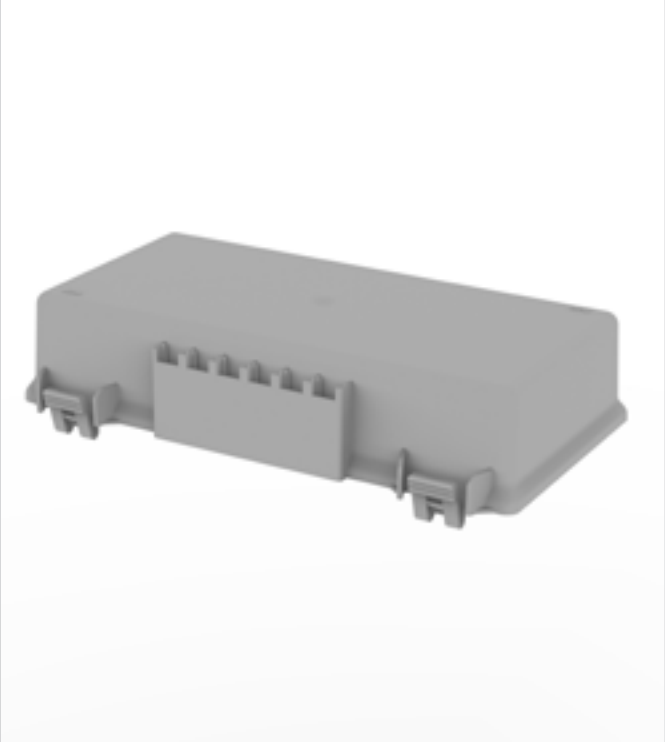

For: **33.01706-0**

Art.	M	
33.01707-0	PP GF30	1/60

Framework for 4 modules of 91,6x35 mm.

Art.	M	
33.01520-0	PP GF30	1/63

For: **33.01520-0**

Art.	M	
33.01530-0	PP GF30	1/63

Framework for 12 modules of 91,6x35 mm.

Art.	M	
33.01682-0	PP GF30	1/25

Framework for 12 modules of 91,6x35 mm.

Art.	M	
33.01680-0	PP GF30	1/104

91,6x35 mm modules

Framework for 12 modules of 91,6x35 mm.

Art.	M	
33.01681-0	PP GF30	1/30

Intermediate support modules 91,6x35 mm.

Art.	M	
33.01620-0	PP GF30	1/250

Relay retrainer

Art.	M	
33.01630-0	PP GF13	1/350

Relay retrainer

Art.	M	
33.01376-0	PP GF13	1/350

Cover for modules 91,6x35 mm.

Art.	M	
33.01590-0	PP GF30	1/150

Support for modules 91,6x35 mm.

Art.	M	
33.01580-0	PP GF30	2/600

Double cover for modules 91,6x35 mm.

Art.	M	
33.01550-0	PP GF30	1/200

High support for modules 91,6x35 mm.

Art.	M	
33.01180-0	PP GF30	2

91,6x35 mm modules

Support for modules 91,6x35 mm.

Art.	M	
33.00699-0	PP GF30	2/400

Module for 30 Mini (03.45) or 10 Micro Relay.

M Module: PA66-MD25. Secondary Lock: PA66. Cover: PA66 GF30.

Art.		
01.01370-0	Module + 6 Secondary Lock + Cover	1
03.01370-0	Module	60
33.01372-0	Secondary Lock	360
33.01371-0	Cover	1/100

Module WP for 18 Mini (03.45) and 4 Micro Relay.

M Module: PA66-MD25. Cover: PA66 GF30.

Art.		
01.01568-0	Module + Cover	1
03.01568-0	Module	48
33.01371-0	Cover	1/100

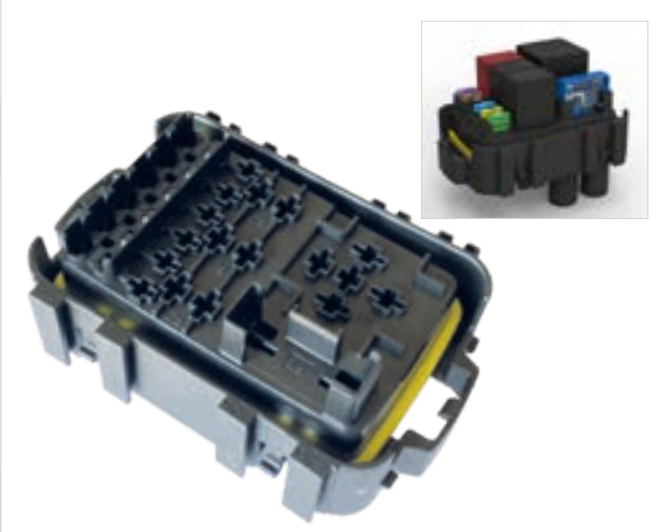

Module WP for 6 Mini (03.45) + 1 Maxi (03.50) + 1 MiniRelay + 3 MicroRelay.

M Module: PA66-MD25. Cover: PA66 GF30.

Art.		
01.01569-0	Module + Top	1
03.01569-0	Module	60
33.01371-0	Cover	1/100

WO module for 6 mini (03.45) + 1 Maxi (03.50) + 2 Maxi Relay + 1 Micro Relay

M Module: PA66-MD25. Lid: PA66 GF30.

Art.		
01.01491-0	Module + Top	1
03.01491-0	Module	60
33.01371-0	Cover	1/100

WP-modules

Cover for WP modules

Art.	M	
33.01371-0	PA66 GF30	1/10

Support for WP modules

Art.	M	
33.00690-0	PA66	10/100

Support for WP modules

Art.	M	
33.00691-0	PA66	10/100

LINK BATT

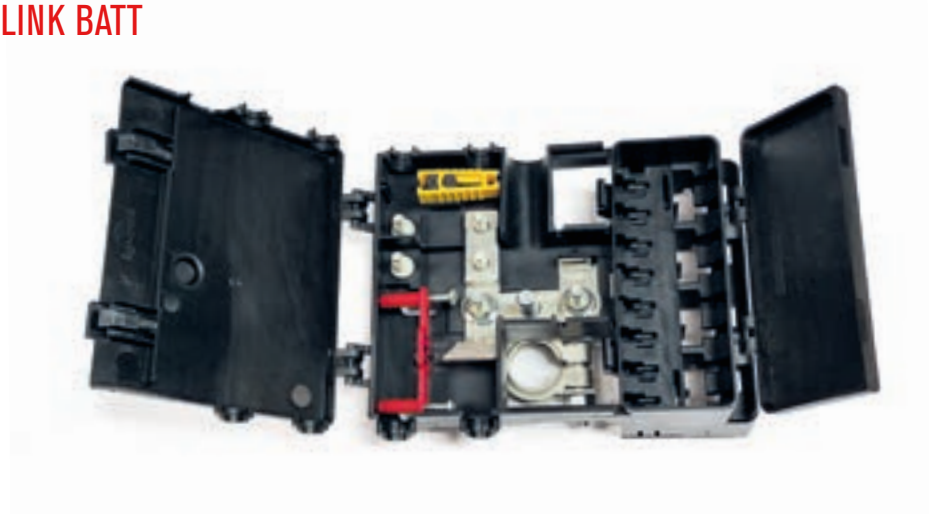

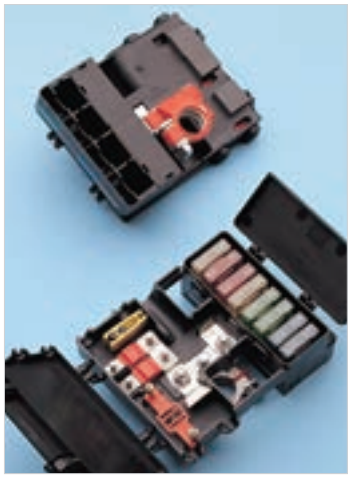

Module for 8 Maxi (03.50) and 2 Midi (03.55)

Art.	M	
03.00710-0	PP	1/10

For **03.00710-0**

44.40310 44.40320 44.40330 44.40340 MIDI SQR-A

Caps

For: **03.117-0** / **03.118-0** / **03.119-0**

Art.

33.00670-0 10/100

For: **03.120-0** / **03.123-0**

Art.

33.00582-0 10/100

For: **03.121-0**

Art.

33.00562-0 10/100

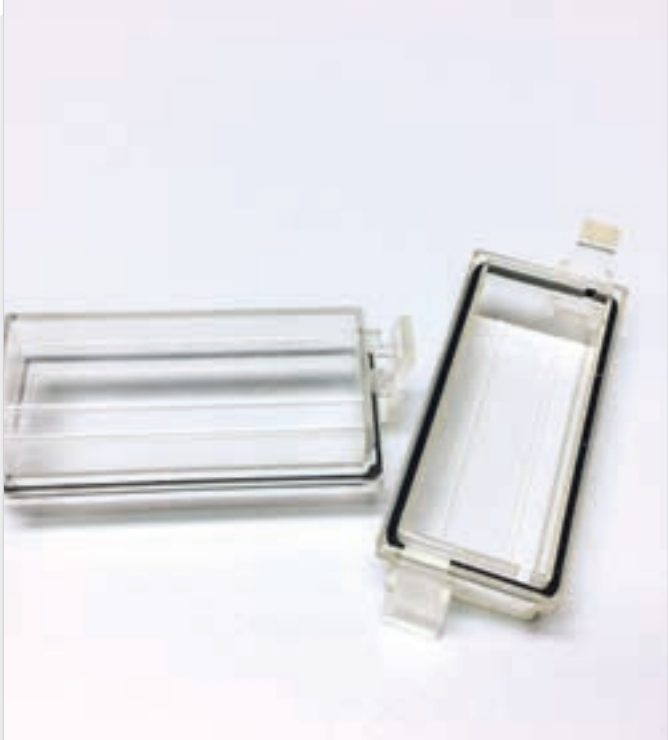

For: **03.124-0**

Art.

33.00602-0 10/100

For: **03.122-0**

Art.

33.00542-0 10/100

For: **03.125-0**

Art.

33.00612-0 10/100

For: **03.127-0** / **03.128-0** / **03.132-0**

Art.

33.00359-0 10/100

For: **03.133-0**

Art.

33.05539-0 10/100

10/100

Art.	For:
33.05526-0	03.134-0 x1
33.05527-0	03.134-0 x2
33.05528-0	03.134-0 x3
33.05529-0	03.134-0 x4

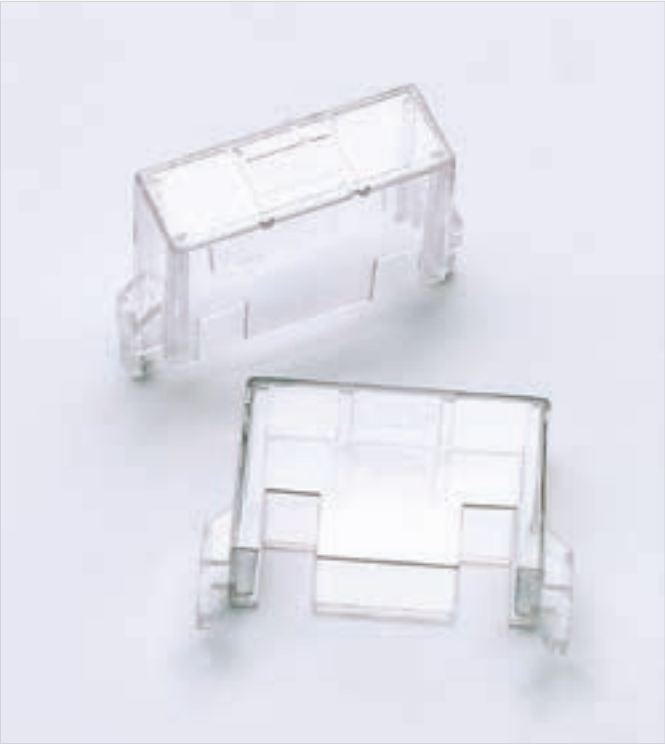

For: **03.138-0**

Art.	
33.00391-0	10/100

For: **03.129-0**

Art.	M	
33.00415-0	PA66 GF-30	10/100

For: 5x20 mm.

Art.

33.006-1 25/250

For: 5x20 mm.

Art.

33.008-1 25/250

For: 6,3x32 mm.

Art.

33.009-1 25/250

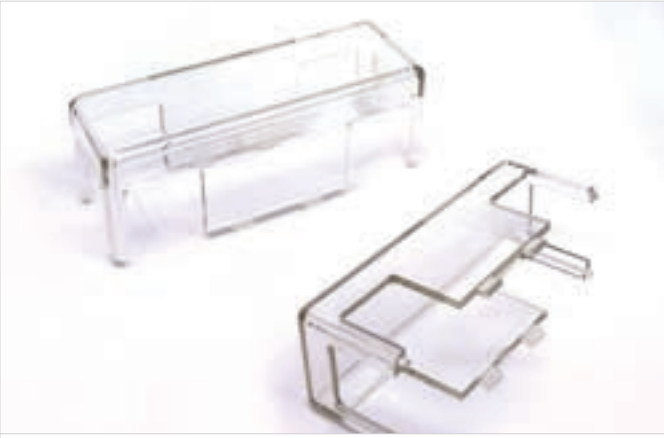

For: **03.01391-0** / **03.01394-0**

Art.

33.01391-0 10

For: **03.1068-0**

Art.

33.1068C-0 10

For: **03.1069-0**

Art.

33.1069C-0 10

For: **03.01392-0**

Art.

33.01392-0 10

For: **03.137-0**

Art.

33.21200 10

For: **03.137-0**

Art.

33.21210 10

For: **XB-PF07**

Art.

01520900U 10

For: **03.126-0** / **03.129-0**

Art.

33.00697-0 10/100

For: **03.126-0** / **03.129-0**

Art.

33.00698-0 10/100

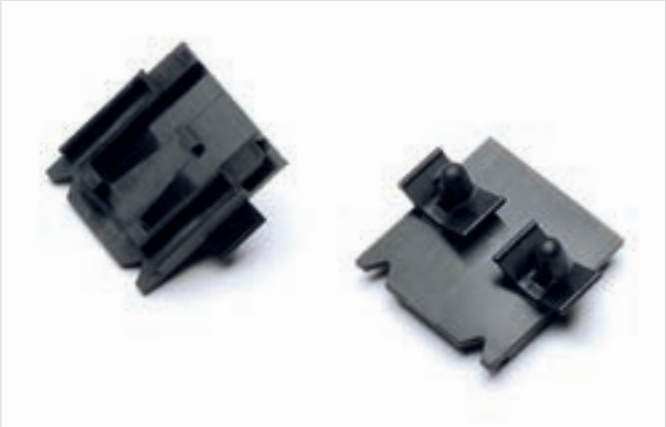

For: **03.126-0** / **03.110-0** / **03.138-0** / **03.137-0**

Art.

33.00392-0 10/100

For: **03.126-0** / **03.110-0** / **03.138-0** / **03.137-0**

Art.

33.00440-0 10/100

For: **03.126-0** / **03.110-0** / **03.138-0** / **03.137-0**

Art.

33.00430-0 10/100

For: **03.127-0** / **03.128-0** / **03.130-0**

Art.

33.00352-0 10/100

For: **03.134-0**

Art.

33.05525-0 10/100

For: **03.110-0 / 03.00380-0**

Art.

33.00395-0 10/100

For: **03.00800-0 / 03.129-0 / 03.138-0 / 03.137-0 03.126-0 / 44.10245**

Art.

33.00848-0 10/100

For: **03.00500-0 / 03.03000-0 / 03.129-0 / 03.138-0 03.137-0 / 03.126-0 / 44.10245**

Art.

33.00949-0 10/100

For: **03.00500-0 / 03.03000-0 / 03.129-0 / 03.138-0 / 03.137-0 / 03.126-0 / 44.10245**

Art.

33.00851-0 10/100

For: **03.1068-0 / 03.1068/2-0**

Art.

33.1068-0 10/100

For: **03.49** / **03.49-LF** / **03.493** / **03.493-LF** / **03.47** / **03.47L** / **03.47-MTA** / **03.45** / **03.45L** / **03.40** / **03.40L** / **03.40-MTA** / 6,3x32

Art.

03.201-0 25/250

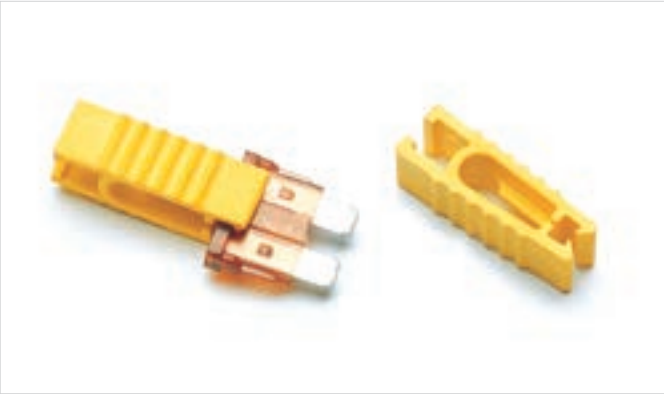

For: **03.49** / **03.49-LF** / **03.493** / **03.493-LF** / **03.47L** / **03.47-MTA** / **03.40** / **03.40-MTA** / **03.40L**

Art.

03.202-0 25/250

For: **03.49** / **03.49-LF** / **03.493** / **03.493-LF** / **03.47** / **03.47L, 03.47-MTA** / **03.45** / **03.45L** / **03.40** / **03.40L**

Art.

03.202-0-NG 25/250

For: **03.49** / **03.49-LF** / **03.493** / **03.493-LF** / **03.47L, 03.47-MTA** / **03.45** / **03.40** / **03.40-MTA** / **03.40L** / 6,3x32

Art.

03.203-0 25/250

For: **03.49** / **03.49-LF** / **03.493** / **03.493-LF** / **03.40** / **03.40-MTA** / **03.40L** / **03.45** / **03.45-MTA** / **03.45L** / 6,3x32

Art.

03.204-0 25/250

Extractor pliers for auto fuses

For: **03.49** / **03.49-LF** / **03.493** / **03.493-LF** / **03.47** / **03.47L** / **03.47-MTA** / **03.45** / **03.45L** / **03.40** / **03.40-MTA** / **03.40L**

Art.

03.205-0 25/250

03.49

03.49-LF

03.493

03.493-LF

03.47

03.47-MTA

03.47L

03.45

03.45L

03.40

03.40-MTA

03.40L

6,3x32

26

250 V

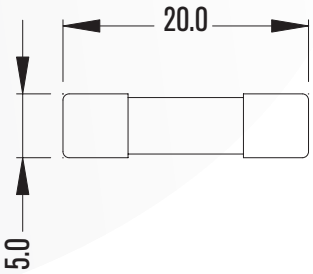

100/1000

Art.	A	Art.	A	Art.	A
03.26.010-1	10 mA	03.26.350-1	350 mA	03.26.0350-1	3.50 A
03.26.020-1	20 mA	03.26.400-1	400 mA	03.26.0400-1	4 A
03.26.030-1	30 mA	03.26.500-1	500 mA	03.26.0500-1	5 A
03.26.032-1	32 mA	03.26.600-1	600 mA	03.26.0600-1	6 A
03.26.040-1	40 mA	03.26.630-1	630 mA	03.26.0630-1	6.3 A
03.26.050-1	50 mA	03.26.700-1	700 mA	03.26.0700-1	7 A
03.26.063-1	63 mA	03.26.750-1	750 mA	03.26.0750-1	7.5 A
03.26.080-1	80 mA	03.26.800-1	800 mA	03.26.0800-1	8 A
03.26.100-1	100 mA	03.26.0100-1	1 A	03.26.1000-1	10 A
03.26.125-1	125 mA	03.26.0125-1	1.25 A	03.26.1200-1	12 A
03.26.150-1	150 mA	03.26.0150-1	1.50 A	03.26.1500-1	15 A
03.26.160-1	160 mA	03.26.0160-1	1.60 A	03.26.1600-1	16 A
03.26.200-1	200 mA	03.26.0200-1	2 A	03.26.2000-1	20 A
03.26.250-1	250 mA	03.26.0250-1	2.50 A	03.26.2500-1	25 A
03.26.300-1	300 mA	03.26.0300-1	3 A		
03.26.315-1	315 mA	03.26.0315-1	3.15 A		

27

250 V

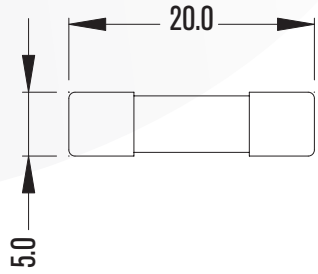

100/1000

Art.	A	Art.	A	Art.	A
03.27.010-1	10 mA	03.27.315-1	315 mA	03.27.0300-1	3 A
03.27.020-1	20 mA	03.27.350-1	350 mA	03.27.0315-1	3.15 A
03.27.030-1	30 mA	03.27.400-1	400 mA	03.27.0350-1	3.50 A
03.27.032-1	32 mA	03.27.500-1	500 mA	03.27.0400-1	4 A
03.27.040-1	40 mA	03.27.600-1	600 mA	03.27.0500-1	5 A
03.27.050-1	50 mA	03.27.630-1	630 mA	03.27.0600-1	6 A
03.27.063-1	63 mA	03.27.700-1	700 mA	03.27.0630-1	6.3 A
03.27.080-1	80 mA	03.27.750-1	750 mA	03.27.0700-1	7 A
03.27.100-1	100 mA	03.27.800-1	800 mA	03.27.0750-1	7.5 A
03.27.125-1	125 mA	03.27.0100-1	1 A	03.27.0800-1	8 A
03.27.150-1	150 mA	03.27.0125-1	1.25 A	03.27.1000-1	10 A
03.27.160-1	160 mA	03.27.0150-1	1.50 A	03.27.1200-1	12 A
03.27.200-1	200 mA	03.27.0160-1	1.60 A	03.27.1500-1	15 A
03.27.250-1	250 mA	03.27.0200-1	2 A	03.27.1600-1	16 A
03.27.300-1	300 mA	03.27.0250-1	2.50 A	03.27.2000-1	20 A

24

250 V

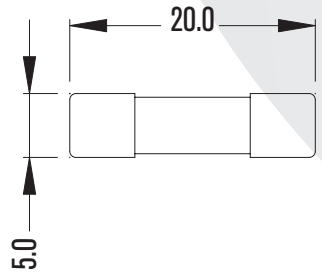

100/1000

Art.	A	Art.	A	Art.	A
03.24.010-1	10 mA	03.24.300-1	300 mA	03.24.0200-1	2 A
03.24.020-1	20 mA	03.24.315-1	315 mA	03.24.0250-1	2.50 A
03.24.030-1	30 mA	03.24.350-1	350 mA	03.24.0300-1	3 A
03.24.032-1	32 mA	03.24.400-1	400 mA	03.24.0315-1	3.15 A
03.24.040-1	40 mA	03.24.500-1	500 mA	03.24.0350-1	3.50 A
03.24.050-1	50 mA	03.24.600-1	600 mA	03.24.0400-1	4 A
03.24.063-1	63 mA	03.24.630-1	630 mA	03.24.0500-1	5 A
03.24.080-1	80 mA	03.24.700-1	700 mA	03.24.0600-1	6 A
03.24.100-1	100 mA	03.24.750-1	750 mA	03.24.0630-1	6.3 A
03.24.125-1	125 mA	03.24.800-1	800 mA	03.24.0700-1	7 A
03.24.150-1	150 mA	03.24.0100-1	1 A	03.24.0750-1	7.5 A
03.24.160-1	160 mA	03.24.0125-1	1.25 A	03.24.0800-1	8 A
03.24.200-1	200 mA	03.24.0150-1	1.50 A	03.24.1000-1	10 A
03.24.250-1	250 mA	03.24.0160-1	1.60 A		

25

250 V

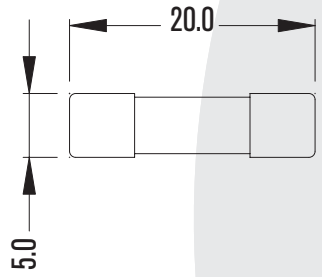

100/1000

Art.	A	Art.	A	Art.	A
03.25.010-1	10 mA	03.25.300-1	300 mA	03.25.0200-1	2 A
03.25.020-1	20 mA	03.25.315-1	315 mA	03.25.0250-1	2.50 A
03.25.030-1	30 mA	03.25.350-1	350 mA	03.25.0300-1	3 A
03.25.032-1	32 mA	03.25.400-1	400 mA	03.25.0315-1	3.15 A
03.25.040-1	40 mA	03.25.500-1	500 mA	03.25.0350-1	3.50 A
03.25.050-1	50 mA	03.25.600-1	600 mA	03.25.0400-1	4 A
03.25.063-1	63 mA	03.25.630-1	630 mA	03.25.0500-1	5 A
03.25.080-1	80 mA	03.25.700-1	700 mA	03.25.0600-1	6 A
03.25.100-1	100 mA	03.25.750-1	750 mA	03.25.0630-1	6.3 A
03.25.125-1	125 mA	03.25.800-1	800 mA	03.25.0700-1	7 A
03.25.150-1	150 mA	03.25.0100-1	1 A	03.25.0750-1	7.5 A
03.25.160-1	160 mA	03.25.0125-1	1.25 A	03.25.0800-1	8 A
03.25.200-1	200 mA	03.25.0150-1	1.50 A	03.25.1000-1	10 A
03.25.250-1	250 mA	03.25.0160-1	1.60 A		

35

250 V

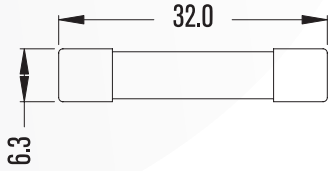

100/1000

Art.	A	Art.	A	Art.	A
03.35.010-1	10 mA	03.35.400-1	400 mA	03.35.0500-1	5 A
03.35.020-1	20 mA	03.35.500-1	500 mA	03.35.0600-1	6 A
03.35.030-1	30 mA	03.35.600-1	600 mA	03.35.0630-1	6.3 A
03.35.032-1	32 mA	03.35.630-1	630 mA	03.35.0700-1	7 A
03.35.040-1	40 mA	03.35.700-1	700 mA	03.35.0750-1	7.5 A
03.35.050-1	50 mA	03.35.750-1	750 mA	03.35.0800-1	8 A
03.35.063-1	63 mA	03.35.800-1	800 mA	03.35.1000-1	10 A
03.35.080-1	80 mA	03.35.0100-1	1 A	03.35.1200-1	12 A
03.35.100-1	100 mA	03.35.0125-1	1.25 A	03.35.1500-1	15 A
03.35.125-1	125 mA	03.35.0150-1	1.50 A	03.35.1600-1	16 A
03.35.150-1	150 mA	03.35.0160-1	1.60 A	03.35.2000-1	20 A
03.35.160-1	160 mA	03.35.0200-1	2 A	03.35.2500-1	25 A
03.35.200-1	200 mA	03.35.0250-1	2.50 A	03.35.3000-1	30 A
03.35.250-1	250 mA	03.35.0300-1	3 A	03.35.3500-1	35 A
03.35.300-1	300 mA	03.35.0315-1	3.15 A	03.35.4000-1	40 A
03.35.315-1	315 mA	03.35.0350-1	3.50 A	03.35.5000-1	50 A
03.35.350-1	350 mA	03.35.0400-1	4 A		

37

250 V

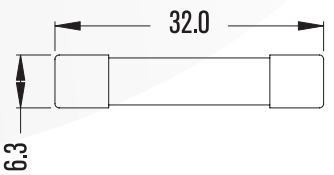

100/1000

Art.	A	Art.	A	Art.	A
03.37.010-1	10 mA	03.37.350-1	350 mA	03.37.0350-1	3.50 A
03.37.020-1	20 mA	03.37.400-1	400 mA	03.37.0400-1	4 A
03.37.030-1	30 mA	03.37.500-1	500 mA	03.37.0500-1	5 A
03.37.032-1	32 mA	03.37.600-1	600 mA	03.37.0600-1	6 A
03.37.040-1	40 mA	03.37.630-1	630 mA	03.37.0630-1	6.3 A
03.37.050-1	50 mA	03.37.700-1	700 mA	03.37.0700-1	7 A
03.37.063-1	63 mA	03.37.750-1	750 mA	03.37.0750-1	7.5 A
03.37.080-1	80 mA	03.37.800-1	800 mA	03.37.0800-1	8 A
03.37.100-1	100 mA	03.37.0100-1	1 A	03.37.1000-1	10 A
03.37.125-1	125 mA	03.37.0125-1	1.25 A	03.37.1200-1	12 A
03.37.150-1	150 mA	03.37.0150-1	1.50 A	03.37.1500-1	15 A
03.37.160-1	160 mA	03.37.0160-1	1.60 A	03.37.1600-1	16 A
03.37.200-1	200 mA	03.37.0200-1	2 A	03.37.2000-1	20 A
03.37.250-1	250 mA	03.37.0250-1	2.50 A	03.37.2500-1	25 A
03.37.300-1	300 mA	03.37.0300-1	3 A	03.37.3000-1	30 A
03.37.315-1	315 mA	03.37.0315-1	3.15 A		

38

250 V

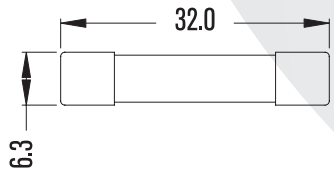

100/1000

Art.	A	Art.	A	Art.	A
03.38.010-1	10 mA	03.38.350-1	350 mA	03.38.0350-1	3.50 A
03.38.020-1	20 mA	03.38.400-1	400 mA	03.38.0400-1	4 A
03.38.030-1	30 mA	03.38.500-1	500 mA	03.38.0500-1	5 A
03.38.032-1	32 mA	03.38.600-1	600 mA	03.38.0600-1	6 A
03.38.040-1	40 mA	03.38.630-1	630 mA	03.38.0630-1	6.3 A
03.38.050-1	50 mA	03.38.700-1	700 mA	03.38.0700-1	7 A
03.38.063-1	63 mA	03.38.750-1	750 mA	03.38.0750-1	7.5 A
03.38.080-1	80 mA	03.38.800-1	800 mA	03.38.0800-1	8 A
03.38.100-1	100 mA	03.38.0100-1	1 A	03.38.1000-1	10 A
03.38.125-1	125 mA	03.38.0125-1	1.25 A	03.38.1200-1	12 A
03.38.150-1	150 mA	03.38.0150-1	1.50 A	03.38.1500-1	15 A
03.38.160-1	160 mA	03.38.0160-1	1.60 A	03.38.1600-1	16 A
03.38.200-1	200 mA	03.38.0200-1	2 A	03.38.2000-1	20 A
03.38.250-1	250 mA	03.38.0250-1	2.50 A	03.38.2500-1	25 A
03.38.300-1	300 mA	03.38.0300-1	3 A	03.38.3000-1	30 A
03.38.315-1	315 mA	03.38.0315-1	3.15 A		

39

250 V

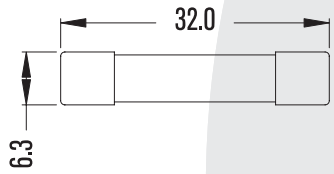

100/1000

Art.	A	Art.	A	Art.	A
03.39.010-1	10 mA	03.39.350-1	350 mA	03.39.0350-1	3.50 A
03.39.020-1	20 mA	03.39.400-1	400 mA	03.39.0400-1	4 A
03.39.030-1	30 mA	03.39.500-1	500 mA	03.39.0500-1	5 A
03.39.032-1	32 mA	03.39.600-1	600 mA	03.39.0600-1	6 A
03.39.040-1	40 mA	03.39.630-1	630 mA	03.39.0630-1	6.3 A
03.39.050-1	50 mA	03.39.700-1	700 mA	03.39.0700-1	7 A
03.39.063-1	63 mA	03.39.750-1	750 mA	03.39.0750-1	7.5 A
03.39.080-1	80 mA	03.39.800-1	800 mA	03.39.0800-1	8 A
03.39.100-1	100 mA	03.39.0100-1	1 A	03.39.1000-1	10 A
03.39.125-1	125 mA	03.39.0125-1	1.25 A	03.39.1200-1	12 A
03.39.150-1	150 mA	03.39.0150-1	1.50 A	03.39.1500-1	15 A
03.39.160-1	160 mA	03.39.0160-1	1.60 A	03.39.1600-1	16 A
03.39.200-1	200 mA	03.39.0200-1	2 A	03.39.2000-1	20 A
03.39.250-1	250 mA	03.39.0250-1	2.50 A	03.39.2500-1	25 A
03.39.300-1	300 mA	03.39.0300-1	3 A	03.39.3000-1	30 A
03.39.315-1	315 mA	03.39.0315-1	3.15 A		

1301 - 6.35 x 0.8 mm.

250 V

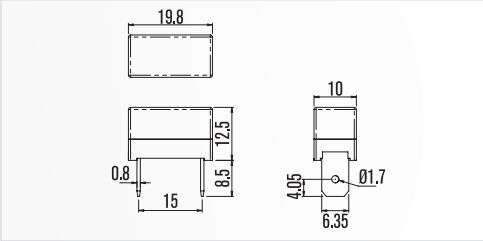

5/50

Art.	A	Art.	A	Art.	A
1301-800mA	800 mA	1301-4A	4 A	1301-15A	15 A
1301-1A	500 mA	1301-5A	5 A	1301-16A	16 A
1301-1.25A	1.25 A	1301-6.3A	6.3 A	1301-20A	20 A
1301-1.6A	1.6 A	1301-7A	7 A	1301-25A	25 A
1301-2A	2 A	1301-8A	8 A	1301-30A	30 A
1301-2.5A	2.5 A	1301-10A	10 A		
1301-3.15A	3.15 A	1301-12A	12 A		

1303 - 6.35 x 0.8 mm.

250 V

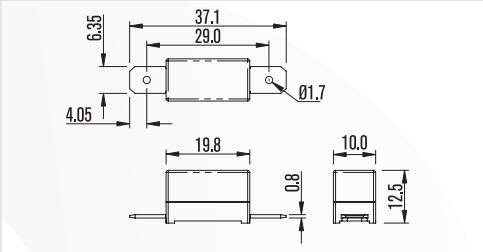

5/50

Art.	A	Art.	A	Art.	A
1303-800mA	800 mA	1303-4A	4 A	1303-15A	15 A
1303-1A	500 mA	1303-5A	5 A	1303-16A	16 A
1303-1.25A	1.25 A	1303-6.3A	6.3 A	1303-20A	20 A
1303-1.6A	1.6 A	1303-7A	7 A	1303-25A	25 A
1303-2A	2 A	1303-8A	8 A	1303-30A	30 A
1303-2.5A	2.5 A	1303-10A	10 A		
1303-3.15A	3.15 A	1303-12A	12 A		

1305

250 V

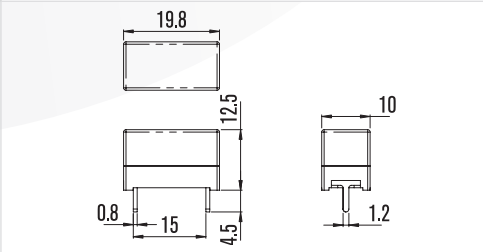

5/50

Art.	A	Art.	A	Art.	A
1305-800mA	800 mA	1305-4A	4 A	1305-15A	15 A
1305-1A	500 mA	1305-5A	5 A	1305-16A	16 A
1305-1.25A	1.25 A	1305-6.3A	6.3 A	1305-20A	20 A
1305-1.6A	1.6 A	1305-7A	7 A	1305-25A	25 A
1305-2A	2 A	1305-8A	8 A	1305-30A	30 A
1305-2.5A	2.5 A	1305-10A	10 A		
1305-3.15A	3.15 A	1305-12A	12 A		

1307

250/80 V

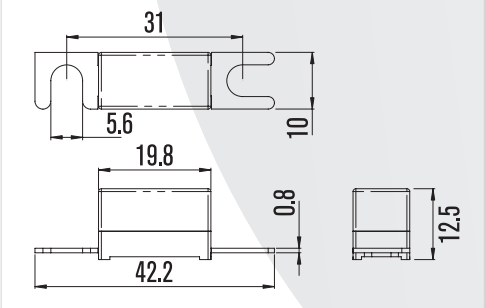

5/50

Art.	A	Art.	A	Art.	A
1307-800mA	800 mA	1307-7A	7 A	1307-40A	40 A
1307-1A	500 mA	1307-8A	8 A	1307-50A	50 A
1307-1.25A	1.25 A	1307-10A	10 A	1307-60A	60 A
1307-1.6A	1.6 A	1307-12A	12 A	1307-70A	70 A
1307-2A	2 A	1307-15A	15 A	1307-80A	80 A
1307-2.5A	2.5 A	1307-16A	16 A	1307-100A	100 A
1307-3.15A	3.15 A	1307-20A	20 A	1307-120A	120 A
1307-4A	4 A	1307-25A	25 A	1307-125A	125 A
1307-5A	5 A	1307-30A	30 A	1307-150A	150 A
1307-6.3A	6.3 A	1307-35A	35 A		

1311 - 6.35 x 0.8 mm.

250 V

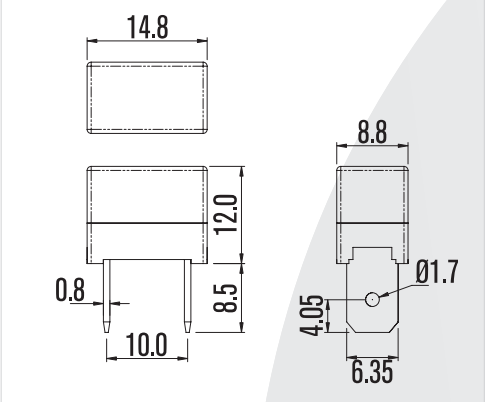

5/50

Art.	A	Art.	A	Art.	A
1311-50mA	50 mA	1311-630mA	630 mA	1311-7A	7 A
1311-63mA	63 mA	1311-800mA	800 mA	1311-8A	8 A
1311-80mA	80 mA	1311-1A	1 A	1311-10A	10 A
1311-100mA	100 mA	1311-1.25A	1.25 A	1311-12A	12 A
1311-125mA	125 mA	1311-1.6A	1.6 A	1311-15A	15 A
1311-160mA	160 mA	1311-2A	2 A	1311-16A	16 A
1311-200mA	200 mA	1311-2.5A	2.5 A	1311-20A	20 A
1311-250mA	250 mA	1311-3.15A	3.15 A	1311-25A	25 A
1311-315mA	315 mA	1311-4A	4 A	1311-30A	30 A
1311-400mA	400 mA	1311-5A	5 A		
1311-500mA	500 mA	1311-6.3A	6.3 A		

1313 - 4.8 x 0.8 mm.

250 V

5/50

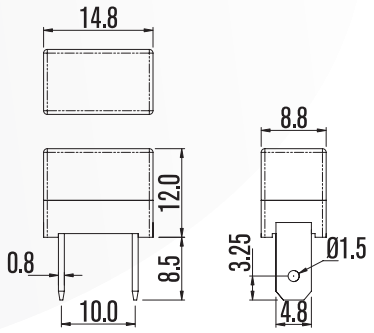

Art.	A	Art.	A	Art.	A
1313-50mA	50 mA	1313-630mA	630 mA	1313-7A	7 A
1313-63mA	63 mA	1313-800mA	800 mA	1313-8A	8 A
1313-80mA	80 mA	1313-1A	1 A	1313-10A	10 A
1313-100mA	100 mA	1313-1.25A	1.25 A	1313-12A	12 A
1313-125mA	125 mA	1313-1.6A	1.6 A	1313-15A	15 A
1313-160mA	160 mA	1313-2A	2 A	1313-16A	16 A
1313-200mA	200 mA	1313-2.5A	2.5 A	1313-20A	20 A
1313-250mA	250 mA	1313-3.15A	3.15 A	1313-25A	25 A
1313-315mA	315 mA	1313-4A	4 A	1313-30A	30 A
1313-400mA	400 mA	1313-5A	5 A		
1313-500mA	500 mA	1313-6.3A	6.3 A		

1315 - 6.35 x 0.8 mm.

250 V

5/50

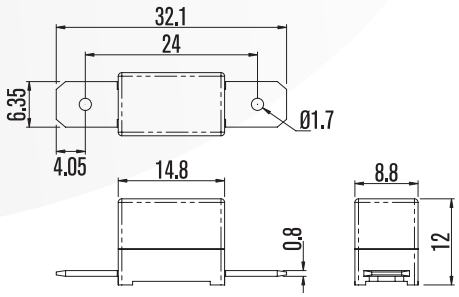

Art.	A	Art.	A	Art.	A
1315-50mA	50 mA	1315-630mA	630 mA	1315-7A	7 A
1315-63mA	63 mA	1315-800mA	800 mA	1315-8A	8 A
1315-80mA	80 mA	1315-1A	1 A	1315-10A	10 A
1315-100mA	100 mA	1315-1.25A	1.25 A	1315-12A	12 A
1315-125mA	125 mA	1315-1.6A	1.6 A	1315-15A	15 A
1315-160mA	160 mA	1315-2A	2 A	1315-16A	16 A
1315-200mA	200 mA	1315-2.5A	2.5 A	1315-20A	20 A
1315-250mA	250 mA	1315-3.15A	3.15 A	1315-25A	25 A
1315-315mA	315 mA	1315-4A	4 A	1315-30A	30 A
1315-400mA	400 mA	1315-5A	5 A		
1315-500mA	500 mA	1315-6.3A	6.3 A		

1317 - 4.8 x 0.8 mm.

250 V

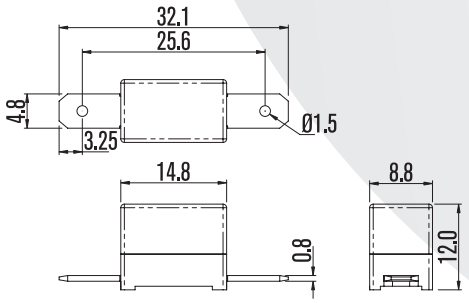

5/50

Art.	A	Art.	A	Art.	A
1317-50mA	50 mA	1317-630mA	630 mA	1317-7A	7 A
1317-63mA	63 mA	1317-800mA	800 mA	1317-8A	8 A
1317-80mA	80 mA	1317-1A	1 A	1317-10A	10 A
1317-100mA	100 mA	1317-1.25A	1.25 A	1317-12A	12 A
1317-125mA	125 mA	1317-1.6A	1.6 A	1317-15A	15 A
1317-160mA	160 mA	1317-2A	2 A	1317-16A	16 A
1317-200mA	200 mA	1317-2.5A	2.5 A	1317-20A	20 A
1317-250mA	250 mA	1317-3.15A	3.15 A	1317-25A	25 A
1317-315mA	315 mA	1317-4A	4 A	1317-30A	30 A
1317-400mA	400 mA	1317-5A	5 A		
1317-500mA	500 mA	1317-6.3A	6.3 A		

1311

250 V

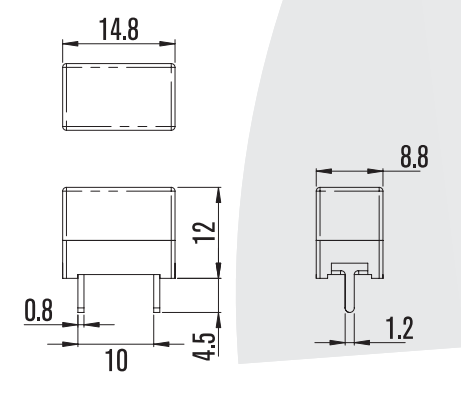

5/50

Art.	A	Art.	A	Art.	A
1319-50mA	50 mA	1319-630mA	630 mA	1319-7A	7 A
1319-63mA	63 mA	1319-800mA	800 mA	1319-8A	8 A
1319-80mA	80 mA	1319-1A	1 A	1319-10A	10 A
1319-100mA	100 mA	1319-1.25A	1.25 A	1319-12A	12 A
1319-125mA	125 mA	1319-1.6A	1.6 A	1319-15A	15 A
1319-160mA	160 mA	1319-2A	2 A	1319-16A	16 A
1319-200mA	200 mA	1319-2.5A	2.5 A	1319-20A	20 A
1319-250mA	250 mA	1319-3.15A	3.15 A	1319-25A	25 A
1319-315mA	315 mA	1319-4A	4 A	1319-30A	30 A
1319-400mA	400 mA	1319-5A	5 A		
1319-500mA	500 mA	1319-6.3A	6.3 A		

1306

250 V

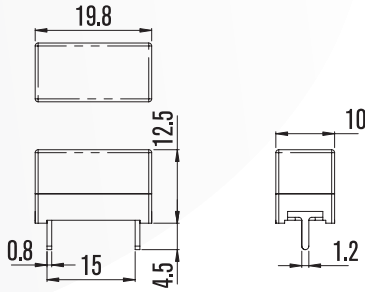

5/50

Art.	A	Art.	A	Art.	A
1306-250mA	250 mA	1306-1A	1 A	1306-7A	7 A
1306-300mA	300 mA	1306-1.25A	1.25 A	1306-7.5A	7.5 A
1306-315mA	315 mA	1306-1.5A	1.5 A	1306-8A	8 A
1306-350mA	350 mA	1306-1.6A	1.6 A	1306-10A	10 A
1306-400mA	400 mA	1306-2A	2 A	1306-12A	12 A
1306-500mA	500 mA	1306-2.5A	2.5 A	1306-15A	15 A
1306-600mA	600 mA	1306-3.5A	3.5 A	1306-16A	16 A
1306-630mA	630 mA	1306-4A	4 A	1306-20A	20 A
1306-700mA	700 mA	1306-5A	5 A	1306-25A	25 A
1306-750mA	750 mA	1306-6A	6 A	1306-30A	30 A
1306-800mA	800 mA	1306-6.3A	6.3 A		

1308

250 V

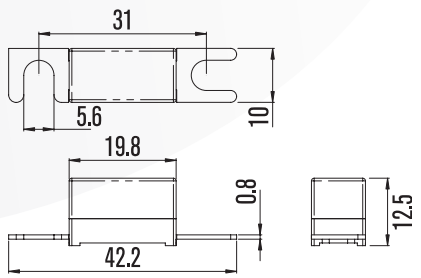

5/50

Art.	A	Art.	A	Art.	A
1308-800mA	800 mA	1308-6A	6 A	1308-35A	35 A
1308-1A	1 A	1308-6.3A	6.3 A	1308-40A	40 A
1308-1.25A	1.25 A	1308-7A	7 A	1308-45A	45 A
1308-1.5A	1.5 A	1308-7.5A	7.5 A	1308-50A	50 A
1308-1.6A	1.6 A	1308-8A	8 A	1308-60A	60 A
1308-2A	2 A	1308-10A	10 A	1308-70A	70 A
1308-2.5A	2.5 A	1308-12A	12 A	1308-80A	80 A
1308-3A	3 A	1308-15A	15 A	1308-100A	100 A
1308-3.15A	3.15 A	1308-16A	16 A	1308-120A	120 A
1308-3.5A	3.5 A	1308-20A	20 A	1308-125A	125 A
1308-4A	4 A	1308-25A	25 A	1308-130A	130 A
1308-5A	5 A	1308-30A	30 A	1308-150A	150 A

1312 - 6.35 x 0.8 mm.

250 V

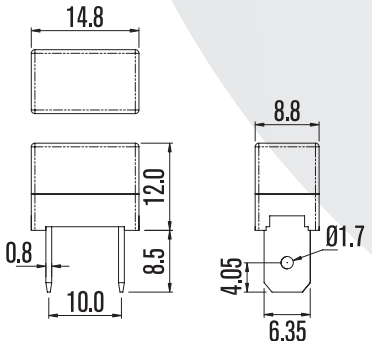

5/50

Art.	A	Art.	A	Art.	A
1312-50mA	50 mA	1312-600mA	600 mA	1312-5A	5 A
1312-60mA	60 mA	1312-630mA	630 mA	1312-6A	6 A
1312-63mA	63 mA	1312-700mA	700 mA	1312-6.3A	6.3 A
1312-80mA	80 mA	1312-750mA	750 mA	1312-7A	7 A
1312-100mA	100 mA	1312-800mA	800 mA	1312-7.5A	7.5 A
1312-125mA	125 mA	1312-1A	1 A	1312-8A	8 A
1312-150mA	150 mA	1312-1.25A	1.25 A	1312-10A	10 A
1312-160mA	160 mA	1312-1.5A	1.5 A	1312-12A	12 A
1312-200mA	200 mA	1312-1.6A	1.6 A	1312-15A	15 A
1312-250mA	250 mA	1312-2A	2 A	1312-16A	16 A
1312-300mA	300 mA	1312-2.5A	2.5 A	1312-20A	20 A
1312-315mA	315 mA	1312-3A	3 A	1312-25A	25 A
1312-350mA	350 mA	1312-3.15A	3.15 A	1312-30A	30 A
1312-400mA	400 mA	1312-3.5A	3.5 A		
1312-500mA	500 mA	1312-4A	4 A		

1314 - 4.8 x 0.8 mm.

250 V

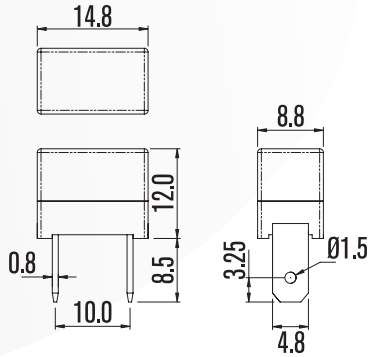

5/50

Art.	A	Art.	A	Art.	A
1314-50mA	50 mA	1314-600mA	600 mA	1314-5A	5 A
1314-60mA	60 mA	1314-630mA	630 mA	1314-6A	6 A
1314-63mA	63 mA	1314-700mA	700 mA	1314-6.3A	6.3 A
1314-80mA	80 mA	1314-750mA	750 mA	1314-7A	7 A
1314-100mA	100 mA	1314-800mA	800 mA	1314-7.5A	7.5 A
1314-125mA	125 mA	1314-1A	1 A	1314-8A	8 A
1314-150mA	150 mA	1314-1.25A	1.25 A	1314-10A	10 A
1314-160mA	160 mA	1314-1.5A	1.5 A	1314-12A	12 A
1314-200mA	200 mA	1314-1.6A	1.6 A	1314-15A	15 A
1314-250mA	250 mA	1314-2A	2 A	1314-16A	16 A
1314-300mA	300 mA	1314-2.5A	2.5 A	1314-20A	20 A
1314-315mA	315 mA	1314-3A	3 A	1314-25A	25 A
1314-350mA	350 mA	1314-3.15A	3.15 A	1314-30A	30 A
1314-400mA	400 mA	1314-3.5A	3.5 A		
1314-500mA	500 mA	1314-4A	4 A		

1316 - 6.35 x 0.8 mm.

250 V

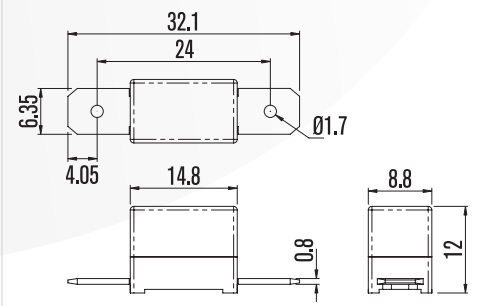

5/50

Art.	A	Art.	A	Art.	A
1316-50mA	50 mA	1316-600mA	600 mA	1316-5A	5 A
1316-60mA	60 mA	1316-630mA	630 mA	1316-6A	6 A
1316-63mA	63 mA	1316-700mA	700 mA	1316-6.3A	6.3 A
1316-80mA	80 mA	1316-750mA	750 mA	1316-7A	7 A
1316-100mA	100 mA	1316-800mA	800 mA	1316-7.5A	7.5 A
1316-125mA	125 mA	1316-1A	1 A	1316-8A	8 A
1316-150mA	150 mA	1316-1.25A	1.25 A	1316-10A	10 A
1316-160mA	160 mA	1316-1.5A	1.5 A	1316-12A	12 A
1316-200mA	200 mA	1316-1.6A	1.6 A	1316-15A	15 A
1316-250mA	250 mA	1316-2A	2 A	1316-16A	16 A
1316-300mA	300 mA	1316-2.5A	2.5 A	1316-20A	20 A
1316-315mA	315 mA	1316-3A	3 A	1316-25A	25 A
1316-350mA	350 mA	1316-3.15A	3.15 A	1316-30A	30 A
1316-400mA	400 mA	1316-3.5A	3.5 A		
1316-500mA	500 mA	1316-4A	4 A		

1318 - 4.8 x 0.8 mm.

250 V

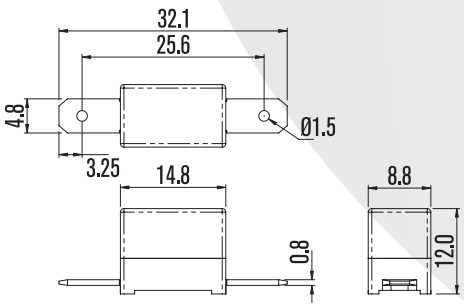

5/50

Art.	A	Art.	A	Art.	A
1318-50mA	50 mA	1318-630mA	630 mA	1318-6A	6 A
1318-63mA	63 mA	1318-700mA	700 mA	1318-6.3A	6.3 A
1318-80mA	80 mA	1318-750mA	750 mA	1318-7A	7 A
1318-100mA	100 mA	1318-800mA	800 mA	1318-7.5A	7.5 A
1318-125mA	125 mA	1318-1A	1 A	1318-8A	8 A
1318-150mA	150 mA	1318-1.25A	1.25 A	1318-10A	10 A
1318-160mA	160 mA	1318-1.5A	1.5 A	1318-12A	12 A
1318-200mA	200 mA	1318-1.6A	1.6 A	1318-15A	15 A
1318-250mA	250 mA	1318-2A	2 A	1318-16A	16 A
1318-300mA	300 mA	1318-2.5A	2.5 A	1318-20A	20 A
1318-315mA	315 mA	1318-3A	3 A	1318-25A	25 A
1318-350mA	350 mA	1318-3.15A	3.15 A	1318-30A	30 A
1318-400mA	400 mA	1318-3.5A	3.5 A		
1318-500mA	500 mA	1318-4A	4 A		
1318-600mA	600 mA	1318-5A	5 A		

1320

250 V

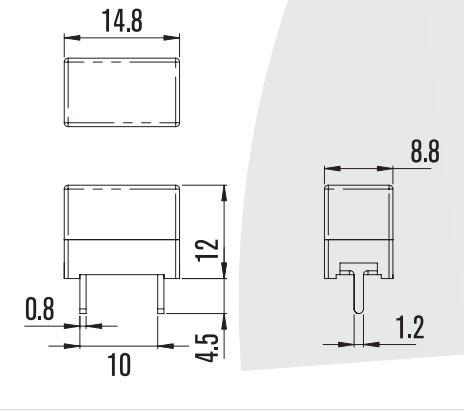

5/50

Art.	A	Art.	A	Art.	A
1320-50mA	50 mA	1320-630mA	630 mA	1320-6A	6 A
1320-63mA	63 mA	1320-700mA	700 mA	1320-6.3A	6.3 A
1320-80mA	80 mA	1320-750mA	750 mA	1320-7A	7 A
1320-100mA	100 mA	1320-800mA	800 mA	1320-7.5A	7.5 A
1320-125mA	125 mA	1320-1A	1 A	1320-8A	8 A
1320-150mA	150 mA	1320-1.25A	1.25 A	1320-10A	10 A
1320-160mA	160 mA	1320-1.5A	1.5 A	1320-12A	12 A
1320-200mA	200 mA	1320-1.6A	1.6 A	1320-15A	15 A
1320-250mA	250 mA	1320-2A	2 A	1320-16A	16 A
1320-300mA	300 mA	1320-2.5A	2.5 A	1320-20A	20 A
1320-315mA	315 mA	1320-3A	3 A	1320-25A	25 A
1320-350mA	350 mA	1320-3.15A	3.15 A	1320-30A	30 A
1320-400mA	400 mA	1320-3.5A	3.5 A		
1320-500mA	500 mA	1320-4A	4 A		
1320-600mA	600 mA	1320-5A	5 A		

1701 quick melt

250 V

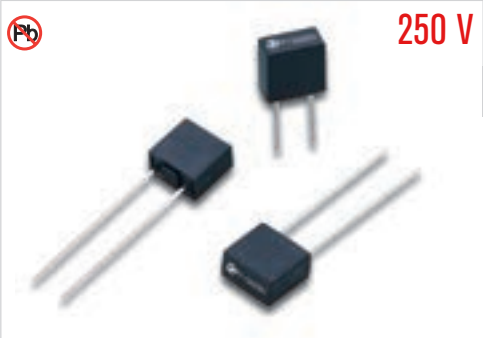

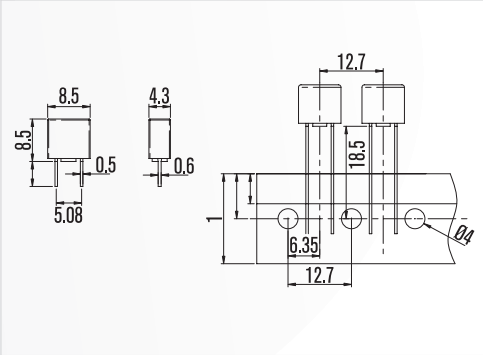

5/50

Art.	A	Art.	A	Art.	A
1701-50mA	50 mA	1701-400mA	400 mA	1701-3.15A	3.15 A
1701-63mA	63 mA	1701-500mA	500 mA	1701-4A	4 A
1701-80mA	80 mA	1701-630mA	630 mA	1701-5A	5 A
1701-100mA	100 mA	1701-800mA	800 mA	1701-6.3A	6.3 A
1701-125mA	125 mA	1701-1A	1 A	1701-7A	7 A
1701-160mA	160 mA	1701-1.25A	1.25 A	1701-8A	8 A
1701-200mA	200 mA	1701-1.6A	1.6 A	1701-10A	10 A
1701-250mA	250 mA	1701-2A	2 A		
1701-315mA	315 mA	1701-2.5A	2.5 A		

1702 slow melt

250 V

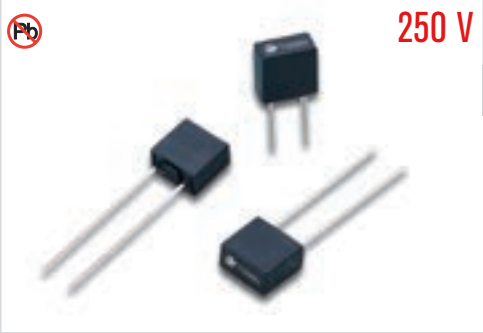

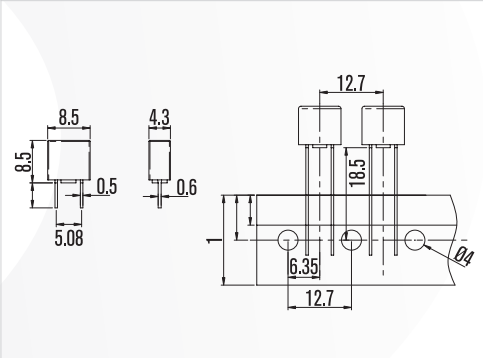

5/50

Art.	A	Art.	A	Art.	A
1702-50mA	50 mA	1702-400mA	400 mA	1702-3.15A	3.15 A
1702-63mA	63 mA	1702-500mA	500 mA	1702-4A	4 A
1702-80mA	80 mA	1702-630mA	630 mA	1702-5A	5 A
1702-100mA	100 mA	1702-800mA	800 mA	1702-6.3A	6.3 A
1702-125mA	125 mA	1702-1A	1 A	1702-7A	7 A
1702-160mA	160 mA	1702-1.25A	1.25 A	1702-8A	8 A
1702-200mA	200 mA	1702-1.6A	1.6 A	1702-10A	10 A
1702-250mA	250 mA	1702-2A	2 A		
1702-315mA	315 mA	1702-2.5A	2.5 A		

1703 Quick melt

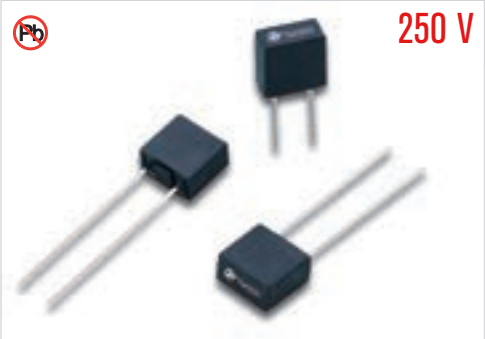

250 V

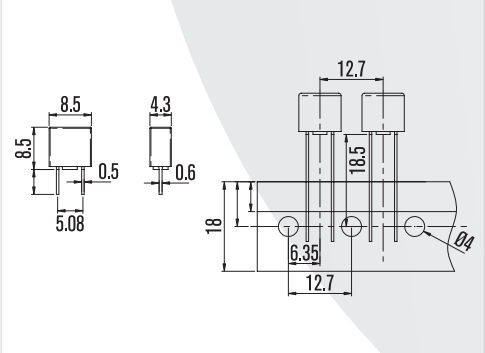

5/50

Art.	A	Art.	A	Art.	A
1703-50mA	50 mA	1703-400mA	400 mA	1703-2.5A	2.5 A
1703-60mA	60 mA	1703-500mA	500 mA	1703-3A	3 A
1703-63mA	63 mA	1703-600mA	600 mA	1703-3.15A	3.15 A
1703-80mA	80 mA	1703-630mA	630 mA	1703-3.5A	3.5 A
1703-100mA	100 mA	1703-700mA	700 mA	1703-4A	4 A
1703-125mA	125 mA	1703-800mA	800 mA	1703-5A	5 A
1703-160mA	160 mA	1703-1A	1 A	1703-6.3A	6.3 A
1703-200mA	200 mA	1703-1.25A	1.25 A	1703-7A	7 A
1703-250mA	250 mA	1703-1.5A	1.5 A	1703-8A	8 A
1703-300mA	300 mA	1703-1.6A	1.6 A	1703-10A	10 A
1703-315mA	315 mA	1703-2A	2 A		

1704 Slow melt

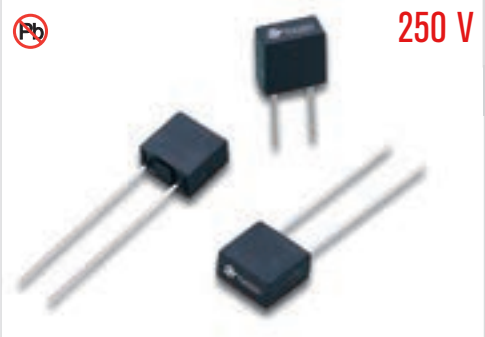

250 V

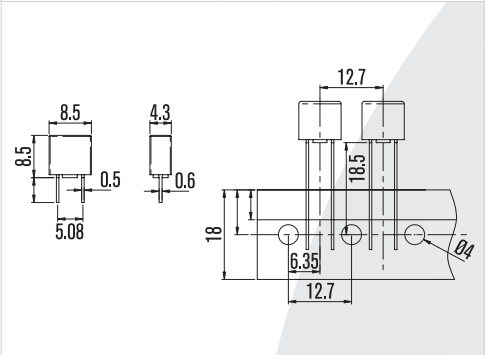

5/50

Art.	A	Art.	A	Art.	A
1704-50mA	50 mA	1704-400mA	400 mA	1704-2.5A	2.5 A
1704-60mA	60 mA	1704-500mA	500 mA	1704-3A	3 A
1704-63mA	63 mA	1704-600mA	600 mA	1704-3.15A	3.15 A
1704-80mA	80 mA	1704-630mA	630 mA	1704-3.5A	3.5 A
1704-100mA	100 mA	1704-700mA	700 mA	1704-4A	4 A
1704-125mA	125 mA	1704-800mA	800 mA	1704-5A	5 A
1704-160mA	160 mA	1704-1A	1 A	1704-6.3A	6.3 A
1704-200mA	200 mA	1704-1.25A	1.25 A	1704-7A	7 A
1704-250mA	250 mA	1704-1.5A	1.5 A	1704-8A	8 A
1704-300mA	300 mA	1704-1.6A	1.6 A	1704-10A	10 A
1704-315mA	315 mA	1704-2A	2 A		

1711 Quick melt

250 V

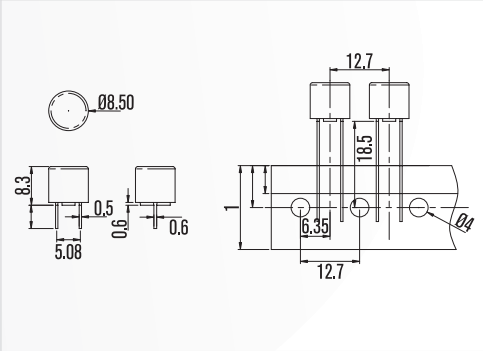

5/50

Art.	A	Art.	A	Art.	A
1711-50mA	50 mA	1711-400mA	400 mA	1711-3.15A	3.15 A
1711-63mA	63 mA	1711-500mA	500 mA	1711-4A	4 A
1711-80mA	80 mA	1711-630mA	630 mA	1711-5A	5 A
1711-100mA	100 mA	1711-800mA	800 mA	1711-6.3A	6.3 A
1711-125mA	125 mA	1711-1A	1 A	1711-7A	7 A
1711-160mA	160 mA	1711-1.25A	1.25 A	1711-8A	8 A
1711-200mA	200 mA	1711-1.6A	1.6 A	1711-10A	10 A
1711-250mA	250 mA	1711-2A	2 A		
1711-315mA	315 mA	1711-2.5A	2.5 A		

1712 Slow melt

250 V

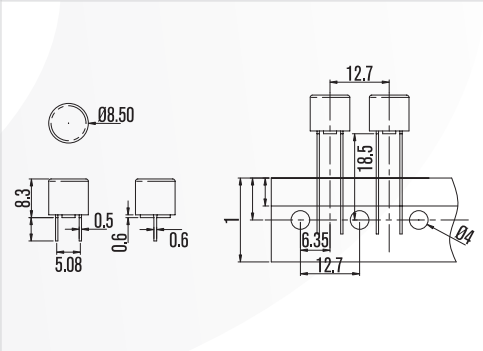

5/50

Art.	A	Art.	A	Art.	A
1712-50mA	50 mA	1712-400mA	400 mA	1712-3.15A	3.15 A
1712-63mA	63 mA	1712-500mA	500 mA	1712-4A	4 A
1712-80mA	80 mA	1712-630mA	630 mA	1712-5A	5 A
1712-100mA	100 mA	1712-800mA	800 mA	1712-6.3A	6.3 A
1712-125mA	125 mA	1712-1A	1 A	1712-7A	7 A
1712-160mA	160 mA	1712-1.25A	1.25 A	1712-8A	8 A
1712-200mA	200 mA	1712-1.6A	1.6 A	1712-10A	10 A
1712-250mA	250 mA	1712-2A	2 A		
1712-315mA	315 mA	1712-2.5A	2.5 A		

1713 Quick melt

250 V

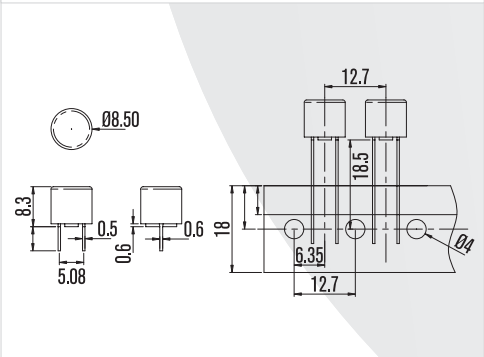

5/50

Art.	A	Art.	A	Art.	A
1713-50mA	50 mA	1713-400mA	400 mA	1713-2.5A	2.5 A
1713-60mA	60 mA	1713-500mA	500 mA	1713-3A	3 A
1713-63mA	63 mA	1713-600mA	600 mA	1713-3.15A	3.15 A
1713-80mA	80 mA	1713-630mA	630 mA	1713-3.5A	3.5 A
1713-100mA	100 mA	1713-700mA	700 mA	1713-4A	4 A
1713-125mA	125 mA	1713-800mA	800 mA	1713-5A	5 A
1713-160mA	160 mA	1713-1A	1 A	1713-6.3A	6.3 A
1713-200mA	200 mA	1713-1.25A	1.25 A	1713-7A	7 A
1713-250mA	250 mA	1713-1.5A	1.5 A	1713-8A	8 A
1713-300mA	300 mA	1713-1.6A	1.6 A	1713-10A	10 A
1713-315mA	315 mA	1713-2A	2 A		

1714 Slow melt

250 V

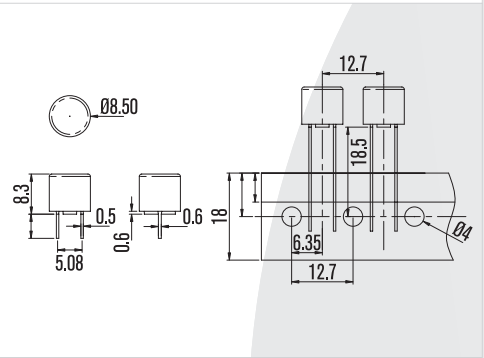

5/50

Art.	A	Art.	A	Art.	A
1714-50mA	50 mA	1714-400mA	400 mA	1714-2.5A	2.5 A
1714-60mA	60 mA	1714-500mA	500 mA	1714-3A	3 A
1714-63mA	63 mA	1714-600mA	600 mA	1714-3.15A	3.15 A
1714-80mA	80 mA	1714-630mA	630 mA	1714-3.5A	3.5 A
1714-100mA	100 mA	1714-700mA	700 mA	1714-4A	4 A
1714-125mA	125 mA	1714-800mA	800 mA	1714-5A	5 A
1714-160mA	160 mA	1714-1A	1 A	1714-6.3A	6.3 A
1714-200mA	200 mA	1714-1.25A	1.25 A	1714-7A	7 A
1714-250mA	250 mA	1714-1.5A	1.5 A	1714-8A	8 A
1714-300mA	300 mA	1714-1.6A	1.6 A	1714-10A	10 A
1714-315mA	315 mA	1714-2A	2 A		

For: 03.24 / 03.25 / 03.26 / 03.27

Art.	mm²	M	IP	
03.100-0	0,75	PA 94 V0	50	25/250

Art.	mm²	M	IP	
03.103-0	0,50	PA 94 V0	50	25/250

Art.	M	A	
03.560-1	PA	10	25/250

Art.	M	A	
03.562-1	Thermoplastic	6,3	25/250

Fuse holder

For: SUBfus 1711, 1712, 1713, 1714

250 V / 1,6 W

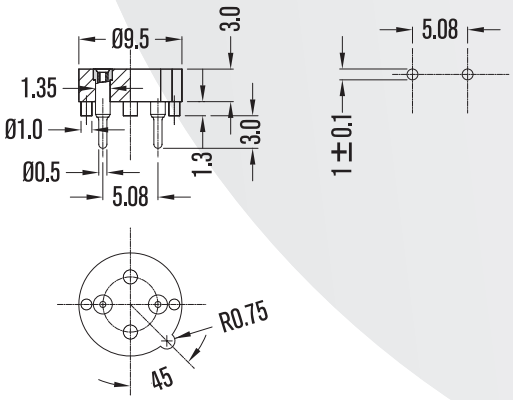

Art.	M	A	
03.1816-01	Thermoplastic	6,3	5/50

250 V / 1,6 W

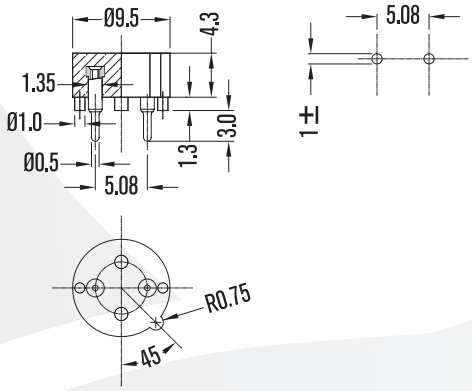

Art.	M	A	
03.1816-02	Thermoplastic	6,3	5/50

ELECTRONIC & INDUSTRY

Panel fuse holder

For: 03.24 / 03.25 / 03.26 / 03.27

250 V

Art. 03.500-1

M Thermoplastic
A 10

25/250

250 V

Art. 03.503-1

M Thermoplastic
A 10

25/250

250 V

Art. 03.504-1

M Thermoplastic
A 10

25/250

250 V

Art. 03.505-1

M Thermoplastic
A 6,3

25/250

250 V

Art. 03.507-1

M Thermoplastic
A 10

25/250

250 V

Art. 03.508-1

M Thermoplastic
A 10

25/250

250 V

Art. 03.509-1

M Thermoplastic
A 10

25/250

250 V

Art. 03.510-1

M Thermoplastic
A 6,3

25/250

Panel fuse holder

For: 03.24 / 03.25 / 03.26 / 03.27

250 V

Art. 03.520-1

M Thermoplastic
A 10

25/250

250 V

Art. 03.521-1

M Thermoplastic
A 10

25/250

250 V

Art. 03.522-1

M Thermoplastic
A 6,3

25/250

Panel fuse holder

For: 03.35 / 03.37 / 03.38 / 03.39

250 V

Art. 03.530-1

M Thermoplastic
A 10

25/250

250 V

Art. 03.531-1

M Thermoplastic
A 10

25/250

250 V

Art. 03.532-1

M Thermoplastic
A 10

25/250

250 V

Art. 03.533-1

M Thermoplastic
A 6,3

25/250

250 V

Art. 03.536-1

M Thermoplastic
A 10

25/250

250 V

Art. 03.538-1

M Thermoplastic
A 10

25/250

250 V

Art. 03.539-1

M Thermoplastic
A 10

25/250

ELECTRONIC & INDUSTRY

Panel fuse holder

For: 03.24 / 03.25 / 03.26 / 03.27

250 V

Art.	A	
03.604-1	6,3	25/250

250 V

Art.	A	
03.605-1	6,3	25/250

250 V

Art.	A	
03.607-1	6,3	25/250

250 V

Art.	A	
03.608-1	6,3	25/250

250 V

Art.	A	
03.609-1	6,3	25/250

For: 03.35 / 03.37 / 03.38 / 03.39

250 V

Art.	A	
03.620-1	6,3	25/250

250 V

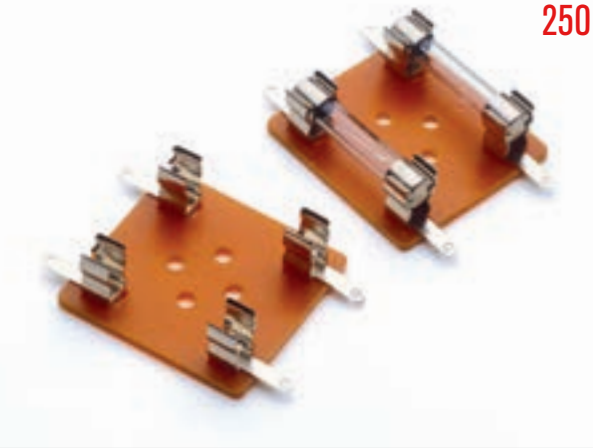

Art.	A	
03.622-1	6,3	25/250

250 V

Art.	A	
03.621-1	6,3	25/250

250 V

Art.	A	
03.624-1	30	25/250

250 V

Art.	A	
03.625-1	30	25/250

250 V

Art.	A	
03.629-1	30	25/250

250 V

Art.	A	
03.630-1	30	25/250

Fuse clips

For: 03.24 / 03.25 / 03.26 / 03.27

Art. 03.650-1
M CuSn
A 10
25/250

Art. 03.651-1
M CuSn
A 15
25/250

Art. 03.652-1
M CuSn
A 10
25/250

Art. 03.653-1
M CuZn30
A 10
25/250

Art. 03.654-1
M CuZn30
A 10
25/250

Art. 03.655-1
M CuZn30
A 15
25/250

Art. 03.656-1
M CuZn30
A 10
25/250

Art. 03.657-1
M CuZn30
A 10
25/250

Art. 03.658-1
M CuSn
A 5
25/250

For: 03.35 / 03.37 / 03.38 / 03.39

Art. 03.672-1
M CuSn
25/250

Art. 03.674-1
M CuZn30
25/250

Art. 03.675-1
M CuZn30
25/250

Art. 03.676-1
M CuZn30
25/250

Art. 03.677-1
M CuSn
25/250

For: 03.65

Art. 03.714-1
M CuZn30
A 30
25/250

AUE

32 V

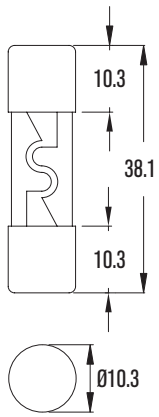

5/100

Art.	A	Art.	A
03.AUE01-0	1	03.AUE20-0	20
03.AUE02-0	2	03.AUE25-0	25
03.AUE03-0	3	03.AUE30-0	30
03.AUE04-0	4	03.AUE35-0	35
03.AUE05-0	5	03.AUE40-0	40
03.AUE06-0	6	03.AUE50-0	50
03.AUE075-0	7,5	03.AUE60-0	60
03.AUE10-0	10	03.AUE70-0	70
03.AUE15-0	15	03.AUE80-0	80

Uni

ATQ

32 V

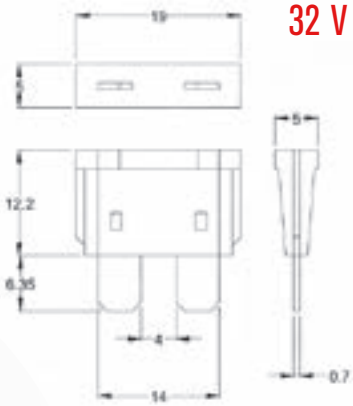

5/100

Art.	A	Art.	A
03.ATQ03-0	3	03.ATQ15-0	15
03.ATQ04-0	4	03.ATQ20-0	20
03.ATQ05-0	5	03.ATQ25-0	25
03.ATQ075-0	7,5	03.ATQ30-0	30
03.ATQ10-0	10		

Maxi

AMT

32 V

2/50

Art.	A	Art.	A
03.AMT20-0	20	03.AMT50-0	50
03.AMT25-0	25	03.AMT60-0	60
03.AMT30-0	30	03.AMT70-0	70
03.AMT35-0	35	03.AMT80-0	80
03.AMT40-0	40	03.AMT100-0	100

ANE

32 V

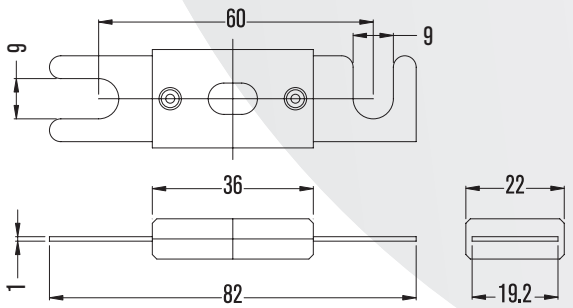

1/10

Art.	A	Art.	A
03.ANE60-0	60	03.ANE225-0	225
03.ANE70-0	70	03.ANE250-0	250
03.ANE80-0	80	03.ANE275-0	275
03.ANE100-0	100	03.ANE300-0	300
03.ANE125-0	125	03.ANE325-0	325
03.ANE130-0	130	03.ANE350-0	350
03.ANE150-0	150	03.ANE400-0	400
03.ANE175-0	175	03.ANE500-0	500
03.ANE200-0	200		

For: 03.AUE

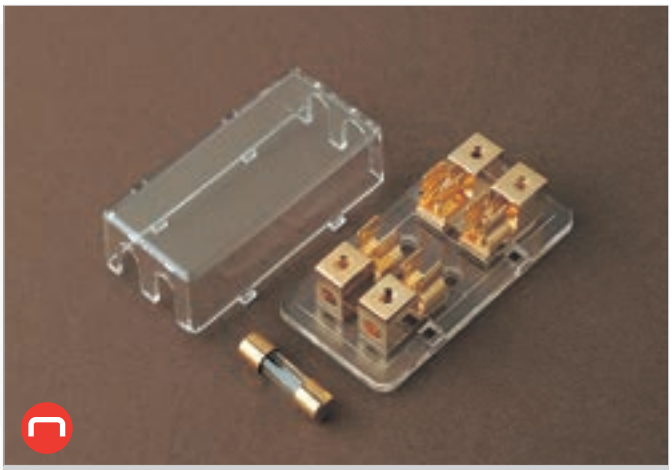

Art.

03.900-0 1/10

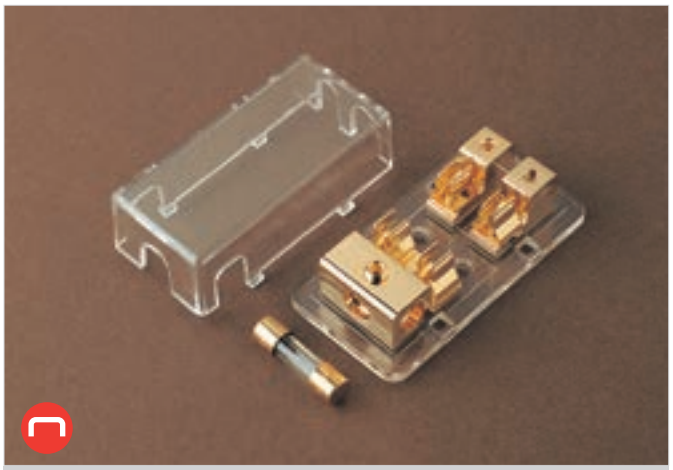

Art.

03.901-0 1/10

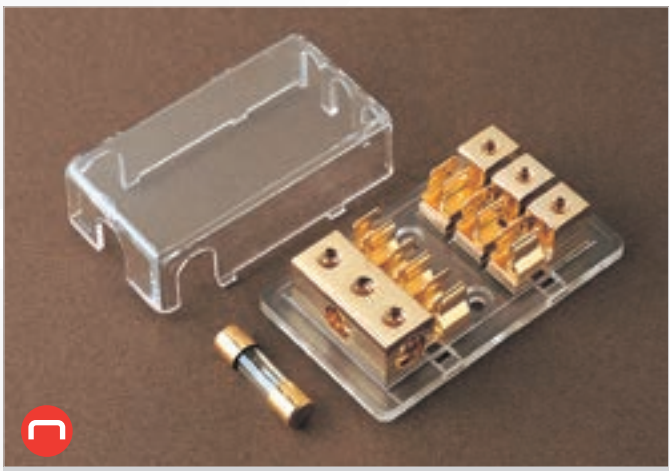

Art.

03.902-0 1/10

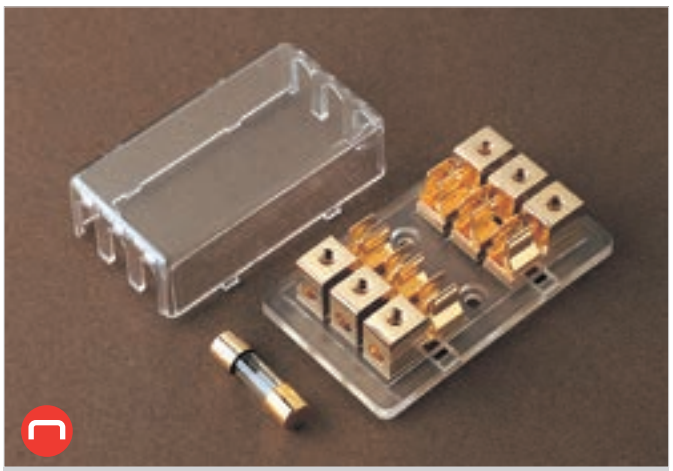

Art.

03.903-0 1/10

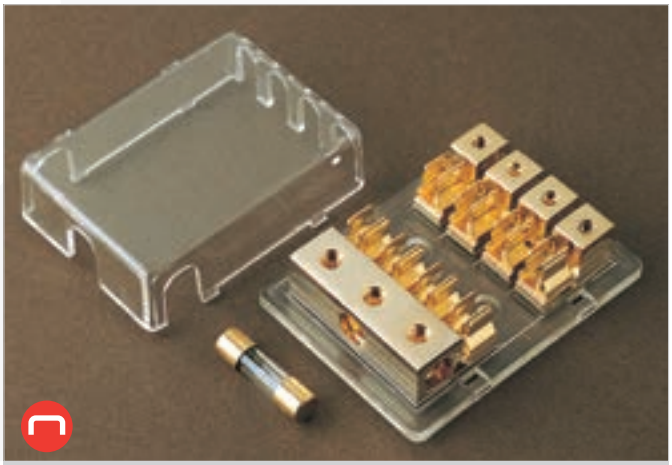

Art.

03.904-0 1/10

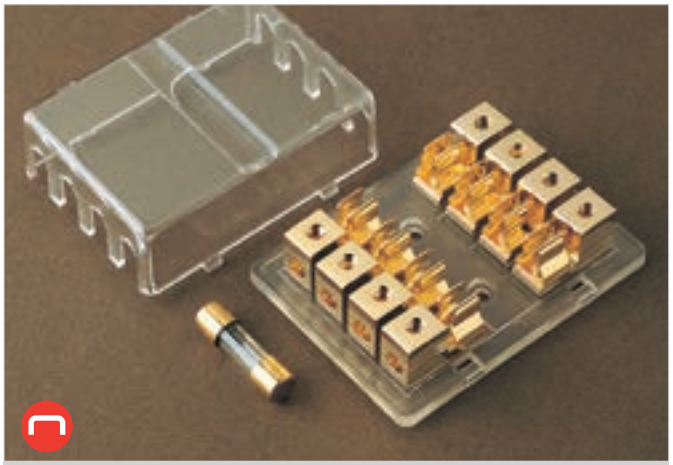

Art.

03.905-0 1/10

Fuse holder

For: 03.AUE

Art.

03.906-0 1/10

Art.

03.907-0 1/10

Art.

03.0001-0 1/10

Art.

03.0002-0 1/10

Art.

03.0012-0 1/10

Art.

03.0003-0 1/10

For: 03.AUE

Art.

03.0004-0 1/10

For: 03.AMT

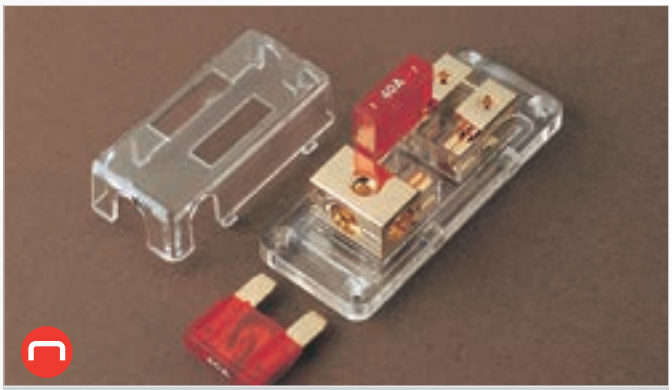

Art.

03.911-0 1/10

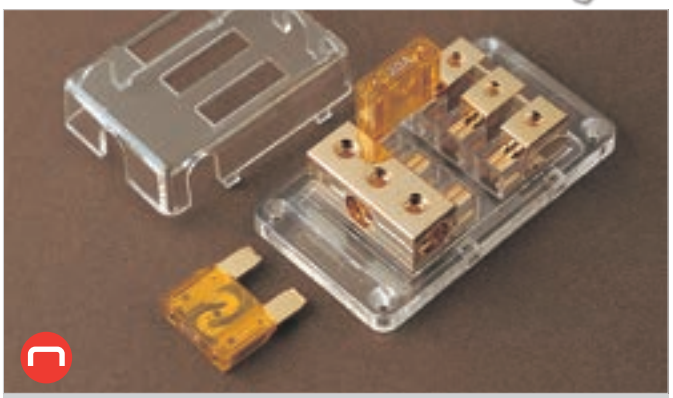

Art.

03.912-0 1/10

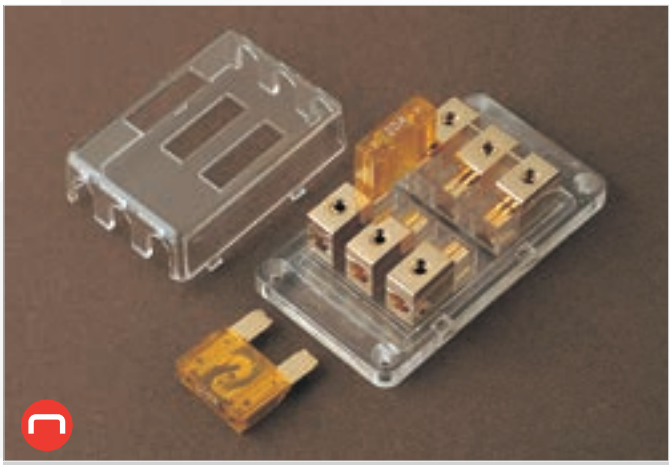

Art.

03.913-0 1/10

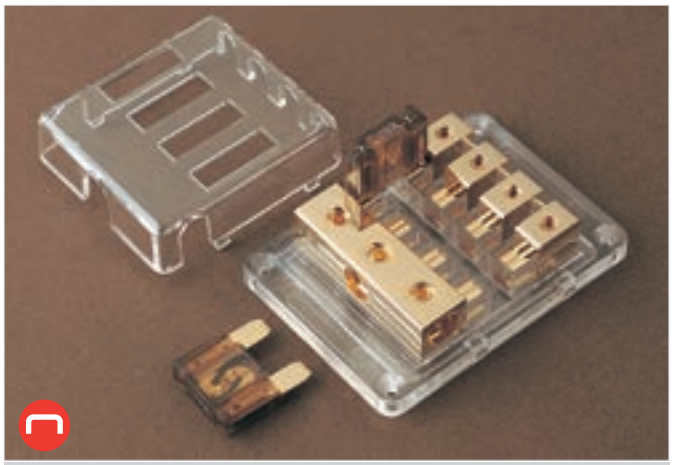

Art.

03.914-0 1/10

Fuse holder

For: 03.AMT

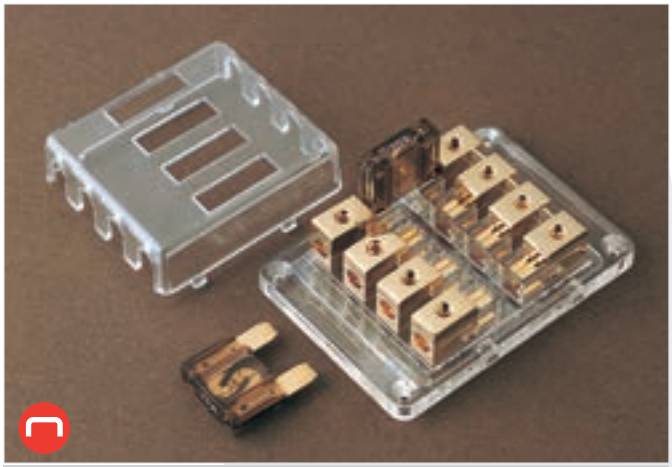

Art.

03.915-0 1/10

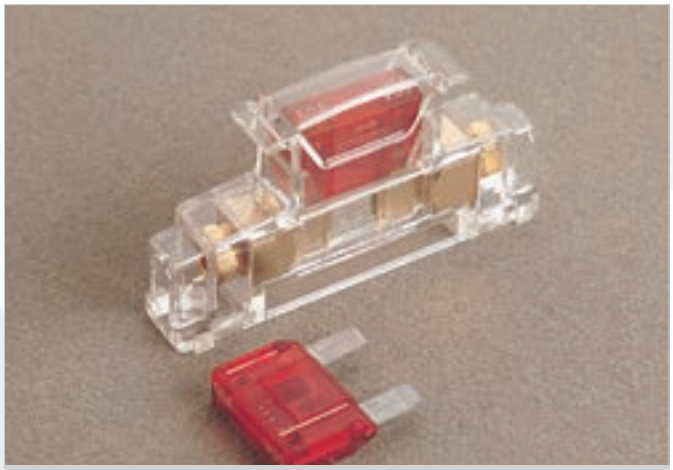

Art.

03.918-0 1/10

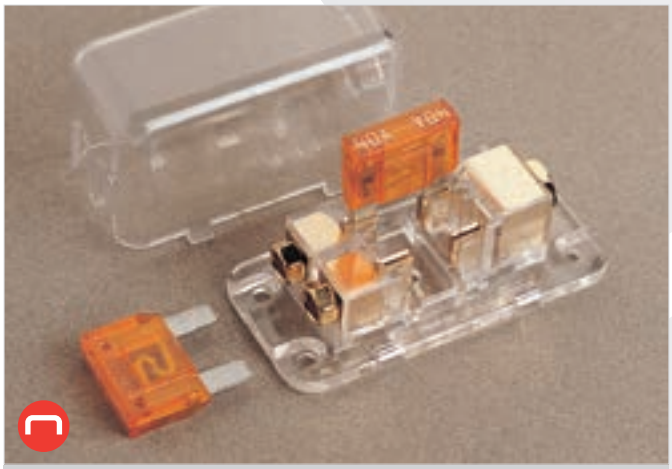

Art.

03.919-0 1/10

For: 03.ATQ

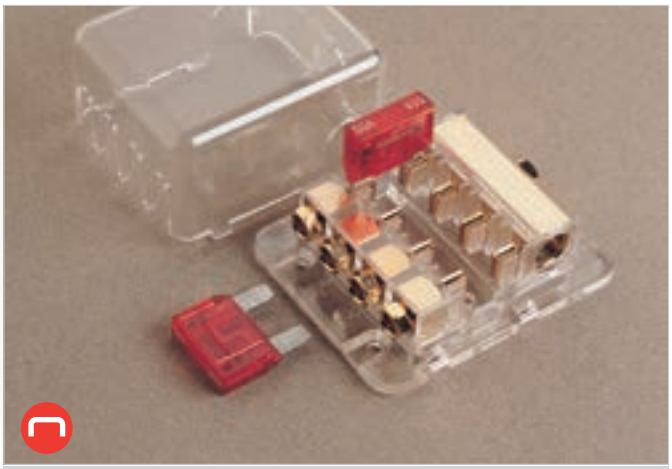

Art.

03.916-0 1/10

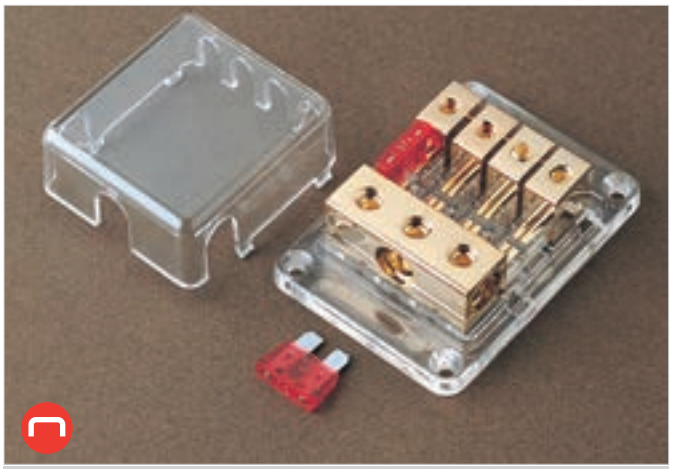

Art.

03.920-0 1

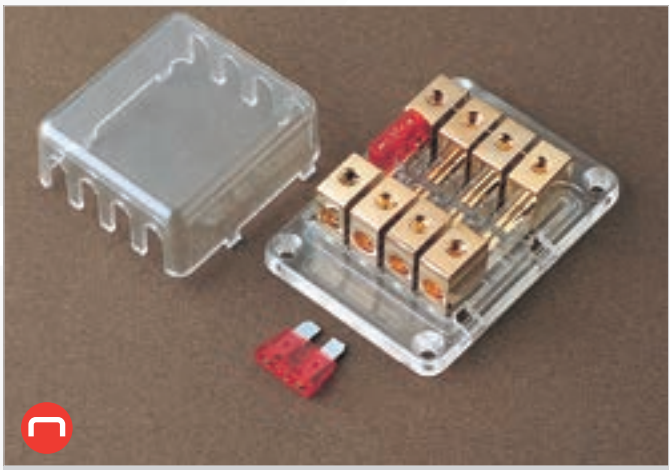

Art.

03.921-0 1/10

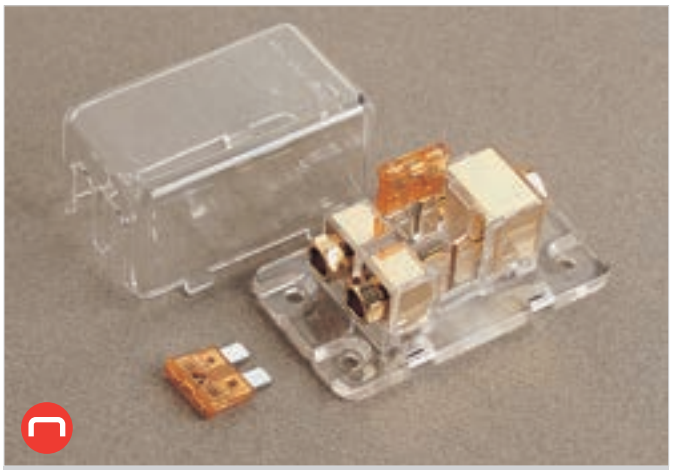

Art.

03.922-0 1/10

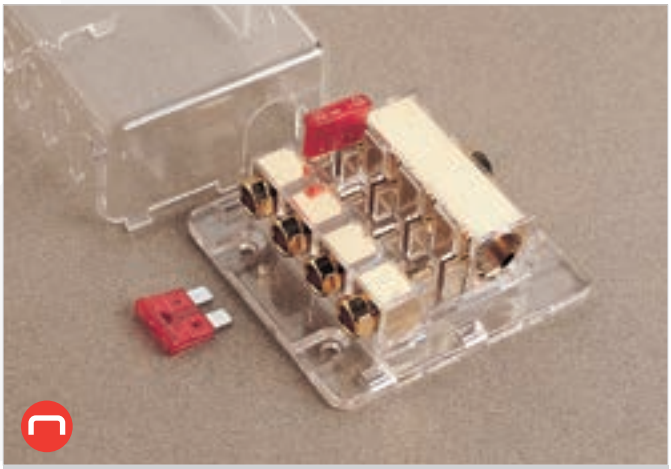

Art.

03.923-0 1/10

Art.

03.924-0 1/10

Fuse holder

For: 03.ANE

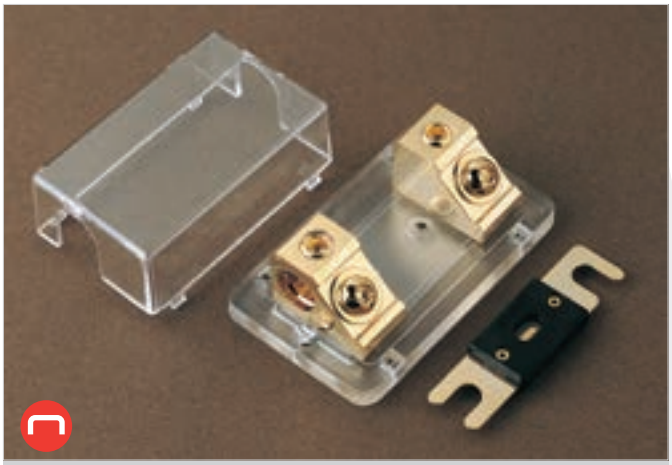

Art.	
03.930-0	1/10

Art.	
03.2203-0	1/5

For: 03.65

Art.	M	A	
03.715-1	CuSn	60	25/250

Art. CS-FU

310 x 245 x 52 mm.

Art.		Art.	
03.45.075-0	25	03.138-0	2
03.45.10-0	25	03.07660-0	4
03.45.15-0	25	03.26.0200-1	25
03.45.20-0	25	03.70.30-0	2
03.45.25-0	25	03.70.50-0	2
03.111-0	2	03.70.80-0	2
03.50.30-0	5	03.71.30-0	2
03.50.50-0	5	03.71.50-0	2
03.50.70-0	5	03.71.80-0	2
03.50.100-0	5		

Art. CS-FU-2

240 x 180 x 40 mm.

Art.		Art.	
03.40.05-0	25	03.30.16-0	25
03.40.075-0	25	03.30.25-0	25
03.40.10-0	25	26-2	25
03.40.15-0	25	03.45.075-0	25
03.40.20-0	25	03.45.10-0	25
03.40.25-0	25	03.45.15-0	25
03.40.30-0	25	03.45.20-0	25
03.30.05-0	25	03.45.25-0	25
03.30.08-0	25	03.45.30-0	25

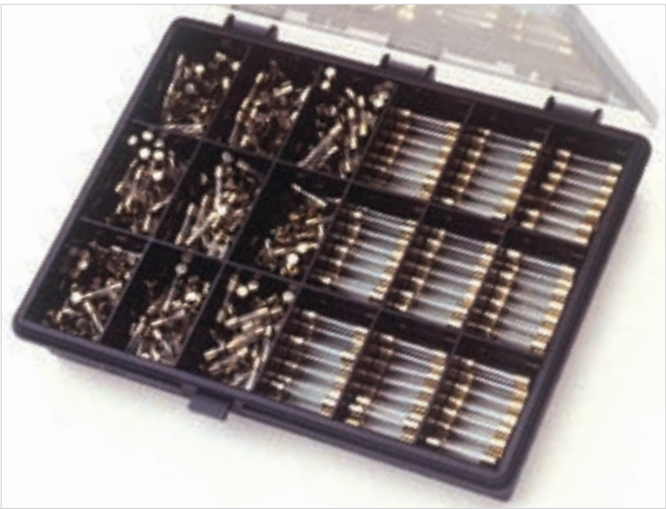

Art. CS-FU-3

240 x 180 x 40 mm.

Art. 5x20 mm.		Art. 6,3x32 mm.	
03.26.500-1	50	03.35.500-1	25
03.26.0100-1	50	03.35.0100-1	25
03.26.0200-1	50	03.35.0200-1	25
03.26.0300-1	50	03.35.0300-1	25
03.26.0400-1	50	03.35.0400-1	25
03.26.0500-1	50	03.35.0500-1	25
03.26.0600-1	50	03.35.0600-1	25
03.26.0800-1	50	03.35.0800-1	25
03.26.1000-1	50	03.35.1000-1	25

Art. CS-FU-LED

240 x 180 x 40 mm.

Art.		Art.	
03.45L.03-0	3	03.40L.03-0	3
03.45L.04-0	3	03.40L.04-0	3
03.45L.05-0	3	03.40L.05-0	3
03.45L.075-0	3	03.40L.075-0	3
03.45L.10-0	5	03.40L.10-0	5
03.45L.15-0	5	03.40L.15-0	5
03.45L.20-0	5	03.40L.20-0	5
03.45L.25-0	3	03.40L.25-0	3
03.45L.30-0	3	03.40L.30-0	3

Art. CS-FU-RE-1

170 x 150 x 30 mm.

Art.		Art.	
03.45RA-10-0	1	03.45RM-10-0	1
03.45RA-15-0	1	03.45RM-15-0	1
03.45RA-20-0	1	03.45RM-20-0	1
03.45RA-25-0	1	03.45RM-25-0	1
03.45RA-30-0	1	03.45RM-30-0	1
03.40RA-06-0	1	03.40RM-06-0	1
03.40RA-08-0	1	03.40RM-08-0	1
03.40RA-10-0	1	03.40RM-10-0	1
03.40RA-15-0	1	03.40RM-15-0	1
03.40RA-20-0	1	03.40RM-20-0	1
03.40RA-25-0	1	03.40RM-25-0	1
03.40RA-30-0	1	03.40RM-30-0	1

Art. CS-FU-RE-2

170 x 150 x 30 mm.

Art.		Art.	
03.45RA-10-0	1	03.45RM-10-0	1
03.45RA-15-0	1	03.45RM-15-0	1
03.45RA-20-0	1	03.45RM-20-0	1
03.45RA-25-0	1	03.45RM-25-0	1
03.45RA-30-0	1	03.45RM-30-0	1
03.40RA-06-0	1	03.40RM-06-0	1
03.40RA-08-0	1	03.40RM-08-0	1
03.40RA-10-0	2	03.40RM-10-0	2
03.40RA-15-0	2	03.40RM-15-0	2
03.40RA-20-0	2	03.40RM-20-0	2
03.40RA-25-0	1	03.40RM-25-0	1
03.40RA-30-0	1	03.40RM-30-0	1

Art. CS-47-A

175 x 143 x 32 mm.

Art.		Art.	
03.40L-075-0	3	03.47-075-0	15
03.40L-15-0	3	03.47-10-0	15
03.40L-20-0	3	03.47-15-0	15
03.40L-25-0	3	03.47-20-0	15
03.40L-35-0	3	03.47-25-0	15
03.47-05-0	15	03.47-30-0	15

Art. CS-47-A1

170 x 150 x 30 mm.

Art.		Art.	
03.47-02-0	5	03.47-15-0	15
03.47-03-0	5	03.47-20-0	15
03.47-04-0	5	03.47-25-0	10
03.47-05-0	5	03.47-30-0	10
03.47-075-0	15	03.202-0-NG	1
03.47-10-0	15		

Art. CS-FU-GB

225 x 115 x 32 mm.

Art.		Art.	
03.40.075-0	25	03.40.20-0	25
03.40.10-0	25	03.40.25-0	20
03.40.15-0	20	03.40.30-0	20

Other possible compositions on request

Fuse holder ➜ Terminal

03.110-0	03.07209-0 03.07212-0	
03.115-0	14327-02	
03.116-0	604410-0	
03.126-0	03.07900-0	
03.127-0	03.07501-0	
03.128-0	03.07900-0	
03.129-0	03.07900-0	
03.131-0	03.07900-0	
03.133-0	03.05917-0	
03.137-0	17660-02	
03.138-0	17650-02	
03.117-0	03.07900-0	
03.120-0	03.07501-0	
03.121-0	03.07501-0	
03.122-0	03.07501-0	

Terminal ➜ Fuse holder

03.07209-0	03.110-0	
03.07212-0	03.110-0	
14327-02	03.115-0	
604410-0	03.116-0	
03.07900-0	03.126-0	
	03.128-0	
	03.129-0	
	03.131-0	
	03.117-0	
03.07501-0	03.120-0	
	03.121-0	
	03.122-0	
03.05917-0	03.133-0	
17660-02	03.137-0	
17650-02	03.138-0	

Module ➜ Terminal

01.01460-0 03.01460-0	11.08331-32	1,0-2,0	
01.01698-0 03.01698-0	11.08331-32	1,0-2,0	
01.01640-0 03.01640-0	11.08331-32	1,0-2,0	
01.01510-0 03.01510-0	11.08331-32	1,0-2,0	
	11.07740-32	2,5-4,0	
	11.02050-02	2,5-4,0	
01.01564-0 03.01564-0	11.08331-32	1,0-2,0	
	11.08400-32	0,5-1,0	
	11.08501-32	0,75-1,0	
01.01375-0 03.01375-0	11.08331-32	1,0-2,0	
01.01697-0 03.01697-0	11.08331-32	1,0-2,0	
	11.08501-32	0,75-1,5	
	11.07400-32	1,5-2,5	
01.01504-0 03.01504-0	11.08331-32	1,0-2,0	

Module ➜ Terminal

01.01690-0 03.01690-0	11.08331-32	1,0-2,0	
	11.07990-32	1,5-2,0	
01.01470-0 03.01470-0	17650-02	1,5-2,5	
	17660-02	4,0-6,0	
01.01600-0 03.01600-0	11.07400-32	1,5-2,5	
	11.07920-32	0,5-1,5	
01.01695-0 03.01695-0	11.08501-32	0,75-1,5	
	11.07740-32	2,5-4,0	
01.01484-0 03.01484-0	11.08400-32	0,5-1,0	
	11.08501-32	0,75-1,5	
01.01494-0 03.01494-0	11.08501-32	0,75-1,0	
	11.07740-32	2,5-4,0	
01.01660-0 03.01660-0	11.08501-32	0,75-1,5	
	11.07740-32	2,5-4,0	

Module ➜ Terminal

	01.01370-0 03.01370-0	11.08331-32 1,0-2,0	
	01.01568-0 03.01568-0	11.08331-32 1,0-2,0	
		11.08270-32 1,0-2,5	
		11.02050-02 2,5-4,0	
	01.01569-0 03.01569-0	11.08331-32 1,0-2,0	
		11.07400-32 1,5-2,5	
		11.08270-32 1,0-2,5	
		11.02050-02 2,5-4,0	
	01.01491-0 03.01491-0	11.08331-32 1,0-2,0	
		11.07400-32 1,5-2,5	
		11.08270-32 1,0-2,5	
		11.02050-02 2,5-4,0	

Art.	
01.00750	49
01.01370-0	67
01.01375-0	59
01.01460-0	58
01.01470-0	60
01.01484-0	61
01.01491-0	67
01.01494-0	61
01.01504-0	59
01.01510-0	58
01.01564-0	59
01.01568-0	67
01.01569-0	67
01.01600-0	60
01.01640-0	58
01.01660-0	61
01.01690-0	60
01.01695-0	60
01.01697-0	59
01.01698-0	58
01520900U	74
03.0001-0	106
03.0002-0	106
03.0003-0	106
03.0004-0	107
03.0012-0	106
03.00380-0	52
03.00380-0	54
03.00391-0	53
03.00392-0	51
03.00392-0	53
03.00393-0	55
03.00394-0	52
03.00394-0	54
03.00500-0	48
03.00703-0	50
03.00710-0	69
03.00800-0	48
03.01370-0	67
03.01375-0	59
03.01391-0	53
03.01392-0	51
03.01392-0	53
03.01393-0	53
03.01394-0	52
03.01394-0	54
03.01460-0	58
03.01470-0	60
03.01484-0	61
03.01491-0	67
03.01494-0	61
03.01504-0	59
03.01510-0	58
03.01564-0	59
03.01568-0	67
03.01569-0	67
03.01600-0	60
03.01640-0	58
03.01660-0	61
03.01690-0	60
03.01695-0	60
03.01697-0	59
03.01698-0	58
03.01703-0	50
03.03000-0	43
03.040-*	46
03.045-*	46
03.047-*	46
03.049-*	46

Art.	
03.100-0	95
03.103-0	95
03.1068/2-0	35
03.1068-0	35
03.1069/2-0	34
03.1069-0	34
03.108-0	50
03.108-0	55
03.1082-0	51
03.1084-0	51
03.108P2-0	51
03.108P4-0	51
03.109-0	50
03.109-0	55
03.1091-0	52
03.1091-0	54
03.1091S-0	52
03.1091S-0	54
03.110-0	34
03.1101-0	35
03.1102-0	35
03.111B-0	34
03.111L-0	35
03.112-0	37
03.113-0	37
03.114-0	37
03.114-16	37
03.114B-0	37
03.114B-0-6	37
03.114B-16	37
03.114L-0	37
03.115-0	37
03.116-0	38
03.117-0	43
03.118-0	57
03.119-0	57
03.120-*	44
03.121-*	44
03.122-*	44
03.123-*	44
03.124-*	45
03.125-*	45
03.126-0	38
03.126-0-*	38
03.127-0	38
03.128-0	38
03.129-0	39
03.130-0	39
03.131-0	39
03.132-0	39
03.133-0	39
03.133-C	39
03.134-0	39
03.135-0	40
03.136-0	47
03.136-B-0	47
03.136L-0	47
03.137-0	47
03.138-0	47
03.139-0	37
03.141-0	35
03.142-0	42
03.143-0	35
03.144-0	42
03.145-0	42
03.149-0	34
03.1518-*A	29
03.1519-*A	29
03.1520-*A	29

Art.	
03.1521-*A	33
03.1522-*A	30
03.1523-*A	32
03.1524-*A	31
03.1525-*A	31
03.1526-*A	32
03.1527-*A	32
03.1528-*A	30
03.1529-*A	31
03.1530-*A	30
03.1816-01	96
03.1816-02	96
03.1902-0	41
03.1903-0	40
03.1904-0	40
03.1905-0	40
03.1905-B-*	40
03.1906-0	40
03.1908-0	41
03.1909-0	41
03.1910-0	41
03.1911-0	41
03.1912-0	41
03.1995LP-L	36
03.1995MI-L	36
03.1995UN-L	42
03.20.*-0	13
03.201-0	77
03.202-0	77
03.202-0-NG	77
03.203-0	77
03.204-0	77
03.205-0	78
03.21.*-0	13
03.22.*-0	13
03.2203-0	110
03.23.*-0	13
03.24.*-1	80
03.25.*-1	80
03.26.*-1	79
03.27.*-1	79
03.30.*-0	21
03.30.*-MTA	21
03.32.*-0	21
03.32.*-MTA	21
03.33.*-0	23
03.3493-*	46
03.35.*-1	81
03.37.*-1	84
03.38.*-1	82
03.39.*-1	82
03.40.*-0	8
03.40.*-80V	8
03.40.*-MTA	8
03.40L.*-0	8
03.40RA.*-0	26
03.40RA.*-E	26
03.40RM.*-0	25
03.40RR.*-0	26
03.45.*-0	6
03.45.*-80V	6
03.45.*-MTA	6
03.45L.*-0	6
03.45RA.*-0	24
03.45RA.*-E	24
03.45RM.*-0	24
03.45RM.*-E	24
03.45RM.*-E	25
03.45RR.*-0	25

Art.	
03.47.*-0	7
03.47.*-MTA	7
03.4712-0	36
03.4714-0	36
03.4718-0	36
03.4720-0	36
03.47L.*-0	7
03.49.*-0	5
03.49.*-LF	5
03.493.*-0	5
03.493.*-LF	5
03.50.*-0	9
03.50.*-MTA	9
03.500-1	97
03.503-1	97
03.504-1	97
03.505-1	97
03.507-1	97
03.508-1	97
03.509-1	97
03.50C.*-0	10
03.50C8.*-0	10
03.50L.*-0	9
03.510-1	97
03.520-1	98
03.521-1	98
03.522-1	98
03.530-1	99
03.531-1	99
03.532-1	99
03.533-1	99
03.536-1	99
03.538-1	99
03.539-1	99
03.547.*-0	12
03.548.*-0	12
03.549.*-0	12
03.55.*-0	10
03.550.*-0	14
03.551.*-0	27
03.552.*-0	27
03.553.*-0	27
03.555.*-0	28
03.56.*-0	22
03.56.*-MTA	22
03.560-1	95
03.562-1	95
03.570-1	56
03.571-1	56
03.572-1	56
03.573-1	56
03.574-1	56
03.576-1	56
03.578-1	56
03.60.*-0	11
03.604-1	100
03.605-1	100
03.607-1	100
03.608-1	100
03.609-1	100
03.60C.*-0	11
03.620-1	101
03.621-1	101
03.622-1	101
03.624-1	101
03.625-1	101
03.629-1	101
03.630-1	101
03.65.*-0	23

Art.	
03.650-1	102
03.651-1	102
03.652-1	102
03.653-1	102
03.654-1	102
03.655-1	102
03.656-1	102
03.657-1	102
03.658-1	102
03.65L.*-0	23
03.672-1	102
03.674-1	102
03.675-1	102
03.676-1	102
03.677-1	102
03.70.*-0	15
03.70L.*-0	15
03.71.*-0	15
03.714-1	102
03.715-1	110
03.72.*-0	16
03.72L.*-0	16
03.73.*-0	16
03.73L.*-0	17
03.74.*-0	17
03.74L.*-0	17
03.76.*-0	18
03.77.*-0	18
03.77L.*-0	18
03.78.*-0	19
03.78L.*-0	19
03.79.*-0	19
03.79L.*-0	20
03.900-0	105
03.901-0	105
03.902-0	105
03.903-0	105
03.904-0	105
03.905-0	105
03.906-0	106
03.907-0	106
03.911-0	107
03.912-0	107
03.913-0	107
03.914-0	107
03.915-0	108
03.916-0	109
03.918-0	108
03.919-0	108
03.920-0	109
03.921-0	109
03.922-0	109
03.923-0	109
03.924-0	109
03.930-0	110
03.AMT*-0	103
03.ANE*-0	104
03.ATQ*-0	103
03.AUE*-0	103
03.CAL.*-0	11
03.JCASE.*-0	20
03.JCASELP.*-0	20
03.MCASE.*-0	20
06.03000-0	28
06.03010-0	28
06.03020-0	28
06.03050-0	28
1301-*A	83
1303-*A	83

Art.		Art.		Art.		Art.		Art.	
1305-*A	83	33.01590-0	65						
1306-*A	87	33.01601-0	59						
1307-*A	84	33.01601-0	60						
1308-*A	87	33.01602-0	60						
1311-*A	84	33.01620-0	64						
1312-*A	88	33.01630-0	64						
1313-*A	85	33.01661-0	61						
1314-*A	89	33.01680-0	63						
1315-*A	85	33.01681-0	64						
1316-*A	89	33.01682-0	63						
1317-*A	86	33.01691-0	60						
1318-*A	90	33.01696-0	60						
1319-*A	86	33.01699-0	58						
1320-*A	90	33.01706-0	62						
1701-*A	91	33.01707-0	62						
1702-*A	91	33.05525-0	76						
1703-*A	92	33.05526-0	72						
1704-*A	92	33.05527-0	72						
1711-*A	93	33.05528-0	72						
1712-*A	93	33.05529-0	72						
1713-*A	94	33.05539-0	71						
1714-*A	94	33.1068-0	76						
33.00352-0	75	33.1068C-0	73						
33.00359-0	71	33.1069C-0	73						
33.00391-0	72	33.21200	74						
33.00392-0	75	33.21210	74						
33.00395-0	76	BP-0910	43						
33.00415-0	72	BP-0911	43						
33.00430-0	75	BP-0912	43						
33.00440-0	75	BP-0913	43						
33.00542-0	71	BP-0914	43						
33.00562-0	70	BP-0915	43						
33.00564-0	59	CS-47-A	114						
33.00582-0	70	CS-47-A1	114						
33.00602-0	70	CS-FU	111						
33.006-1	73	CS-FU-2	111						
33.00612-0	71	CS-FU-3	112						
33.00670-0	70	CS-FU-GB	115						
33.00690-0	68	CS-FU-LED	112						
33.00691-0	68	CS-FU-RE-1	113						
33.00697-0	75	CS-FU-RE-2	113						
33.00698-0	75	XB-PF07	47						
33.00699-0	66								
33.00791-0	59								
33.00793-0	58								
33.008-1	73								
33.00848-0	76								
33.00851-0	76								
33.009-1	73								
33.00949-0	76								
33.01180-0	65								
33.01371-0	67								
33.01371-0	68								
33.01372-0	67								
33.01376-0	64								
33.01391-0	73								
33.01392-0	74								
33.01450-0	62								
33.01486-0	61								
33.01496-0	61								
33.01506-0	59								
33.01520-0	63								
33.01530-0	63								
33.01540-0	62								
33.01550-0	65								
33.01566-0	59								
33.01580-0	65								

XBCOMPONENTS

CERTIFIED ISO 9001 UKAS MANAGEMENT SYSTEMS 001 E198185

XB Barcelona

C/ Holanda, 37-39. Pol. Montigalà
08917 Badalona
BARCELONA
+34 934 970 022
+34 934 658 330
xb@xbcomponents.com

XB Madrid

C/ Teide, 4. Pl. baja. Oficinas 5 y 6
28703 San Sebastián de los Reyes
MADRID
+34 916 591 193
+34 916 544 901
xbmadrid@xbcomponents.com

XB France

11, rue Paul Bert
94500 Champigny sur Marne
FRANCE
+33(0) 145 163 639
+33(0) 981 708 729
xbparis@xbcomponents.com

XB Italia

Via Belvedere Fogliense, 634
47836 Mondaino (Rimini)
ITALIA
+39 0541 981 656
+39 0541 981 144
info@xbitalia.com

www.xbcomponents.com